EN: Installation Instructions

MONTAGEANLEITUNG

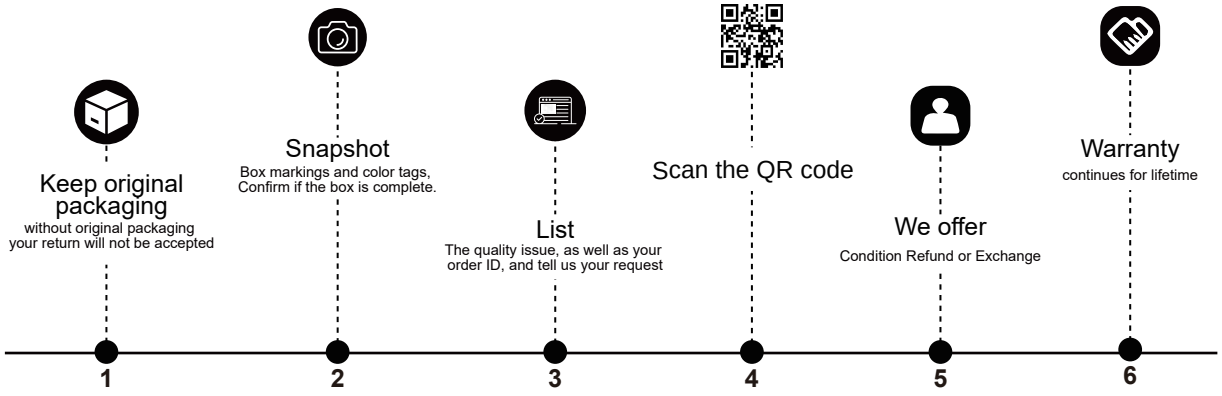

Technical Support

Extended Warranty

24/17 Customer Service

Membership Point Benefist

Return & Exchange Service

Installation Guides

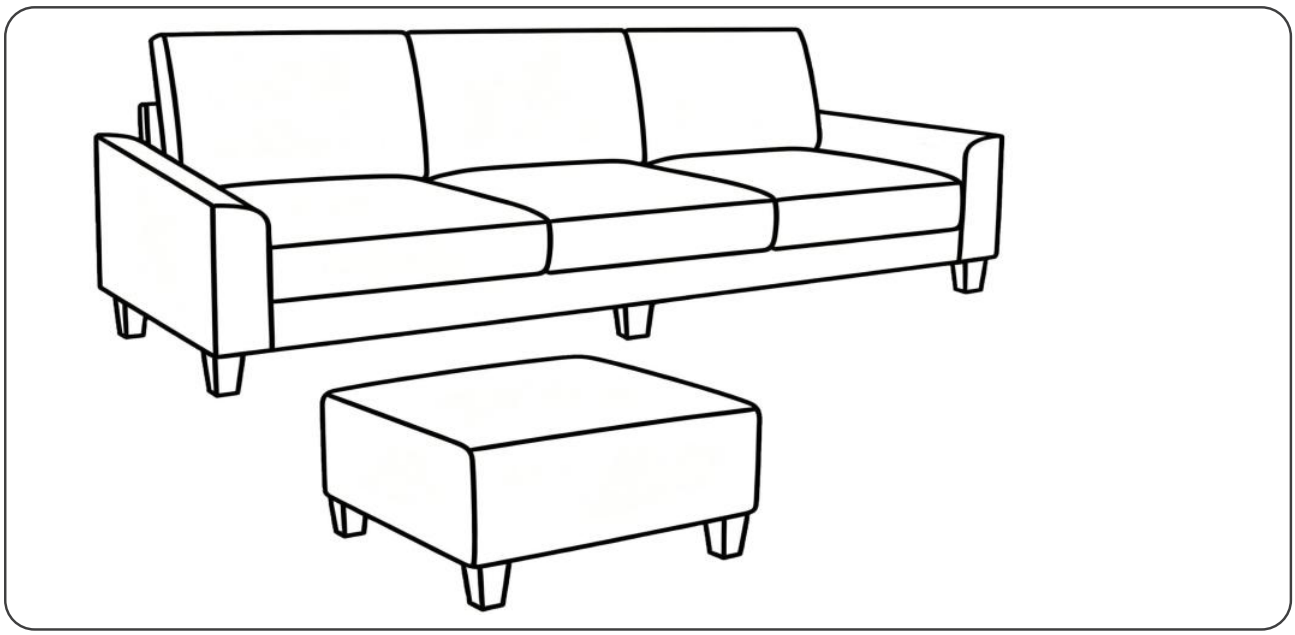

Your order ships in 2 packages; delivery times may differ. Thanks for your patience!

We recommend two people for quicker installation.

[EN]
Warning: Please read these instructions fully before starting assembly.Check you have all the components and tools listed on pages.Keep the instructions for later reference. Parts of the assembly will be easier with 2 people.Seek professional assistance if necessary.
Warning: Please place all parts on a flat surface.Place a soft blanket or similar underneath to protect against scratches or stains. Avoid dragging or sliding components across the floor.
Warning: Regularly check all fittings and fastenings to ensure they are secure and to prevent accidents.If any parts are missing, broken, damaged, or worn, discontinue use of the product until repairs have been made using factory authorized parts.
Warning: Do not place furniture close to fire sources or high-temperature objects to avoid the risk of fire. Do not place furniture in damp environments to prevent material damage.
Warning: Clean furniture with a damp cloth or alcohol, avoid using cleaning agents containing corrosive chemicals.
Warning: Do not allow children to climb on the furniture as this may result in tipping and serious personal injury.Assemble the furniture away from the reach of children.
Warning:The sponge and cloth may be squeezed and deformed during transportation, please don't worry, after you take it out of the bag, you can gently pat the sponge to speed up the recovery of elasticity, or leave it for a few days, it can recover to its origina elasticity.
Warning: Fabrics can fade or change color in direct sunlight. Minimize direct sunlight exposure to extend the life of your furniture.

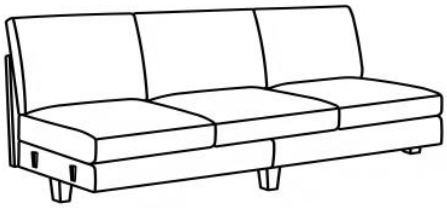

SEAT PART LIST

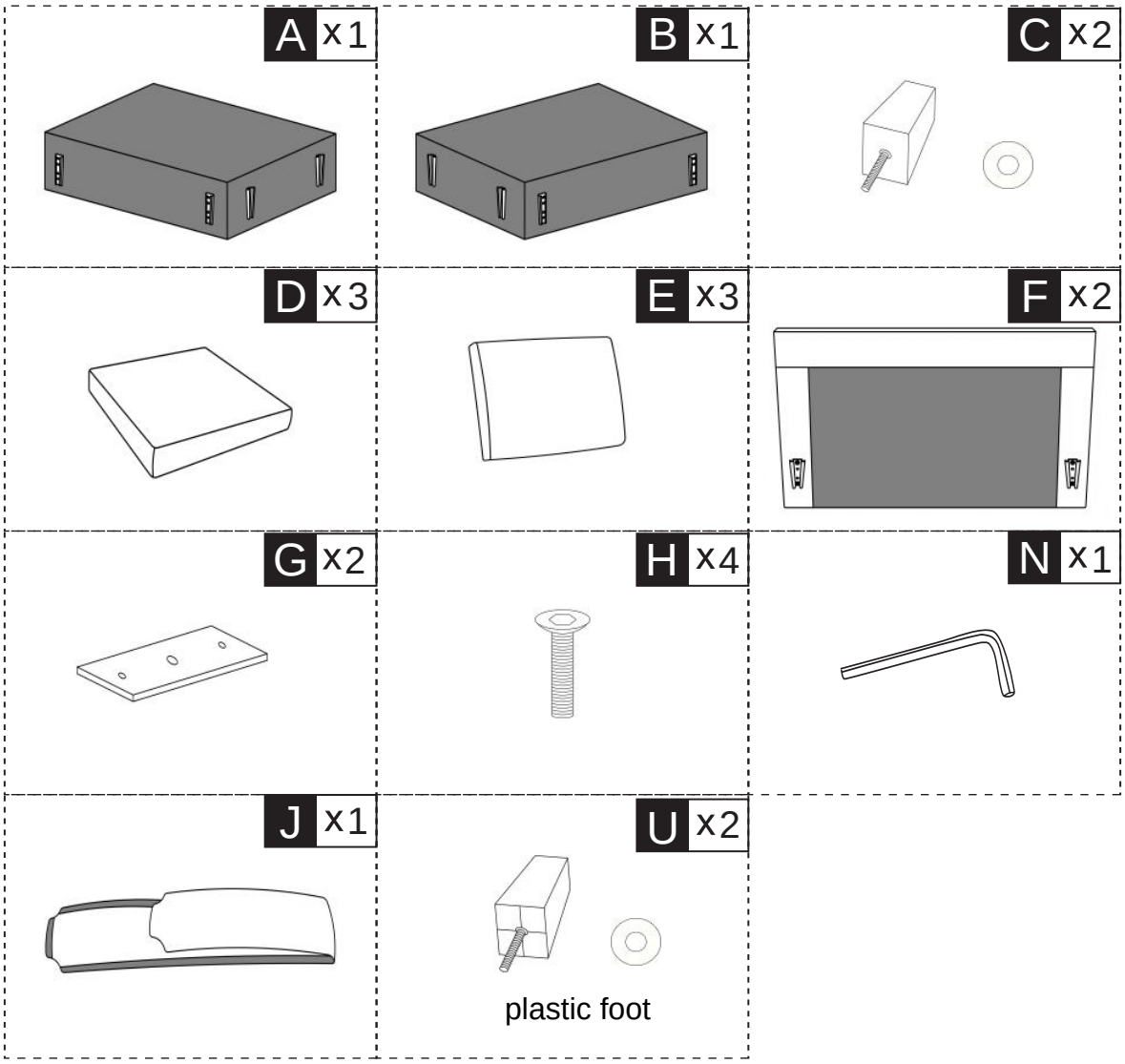

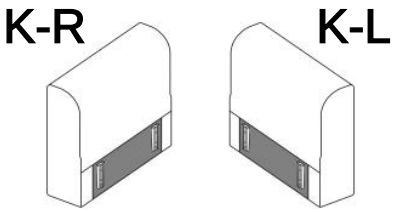

ARMREST PART LIST

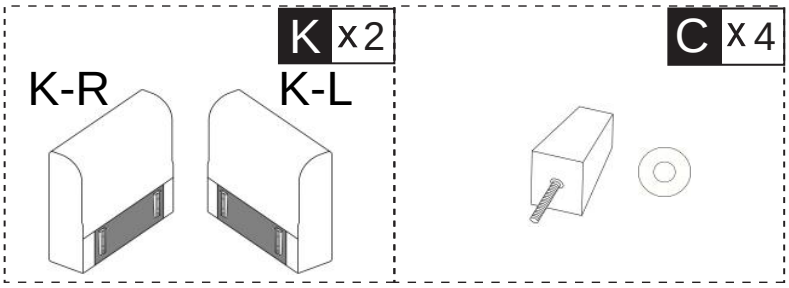

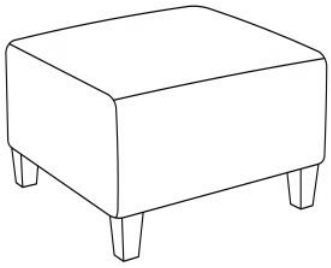

FOOT PART LIST

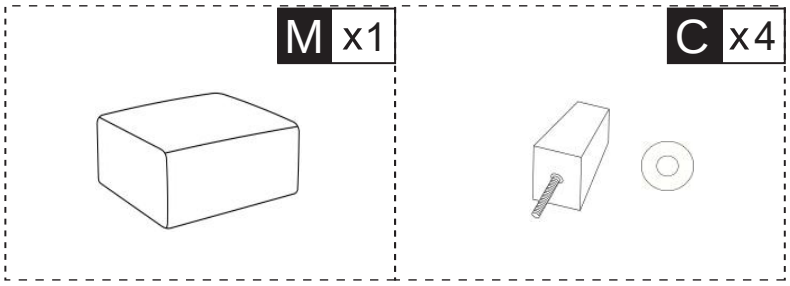

Compressea ana naturaly viscoelasticin a vacuum package, so it may takesome time to fully expand or it may feela little sticky; the foam may sticktogether after opening the vacuumpackage, so it should be carefullyseparated by hand after beingallowed to fully expand

Product Care Instructions

How to Unpack & Restore Your Memory Foam Product

Memory Foam

Made of quality shredded memory foam for durability: it maintains good expansion and shape retention to ensure your comfort during use

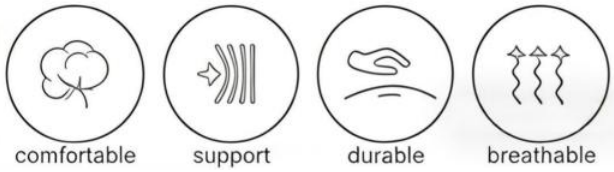

Product Care Instructions

Step One

Unpacking

Open the vacuum bags at the designated positions and begin the restoration process.

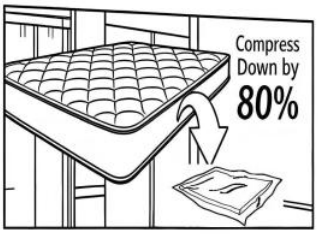

Open Vacuum Bags

Carefully open the vacuum bags at positions E, D, M.

Gently Pat

Lightly pat the product to help air begin entering the compressed memory foam.

Why This Step Matters

This orudal thst step Initares the restoration process, allowing compressed foam to stert expanding

Step Two

Full Restoration Patience is Key

Allow approximately 72 hours for complete air circulation and full expansion.

- Product expands gradually
- Restores to original shape
- Achieves full volume & comfort

Step Three

Removing Wrinkles

If wrinkles appear on the product surface, use an iron to smooth them out.

Use an Iron

Gently iron the surface to remove any wrinkles that may have formed during packaging.

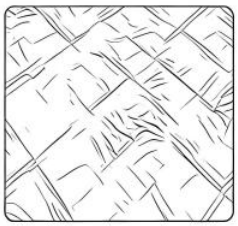

Ironing Tips

- Use low to medium heat setting
- Iron gently without applying heavy pressure
- Use a protective cloth if needed

The Result

Your product will look its best, maintaining a pristine appearance and smooth texture.

Important Notice

Safety First

When using a knife or scissors to open the packaging, please handle with care to avoid injury.

Safety Guidelines

- Always cut away from your body
- Keep hands clear of cutting path
- Use steady, controlled movements
- Keep away from children when using sharp tools

Our Priority

Your ssfety is our top concen, Take your tine and follow the guidelines for a sate, anipyable unboxing experience.

SEAT INSTALLATION GUIDE

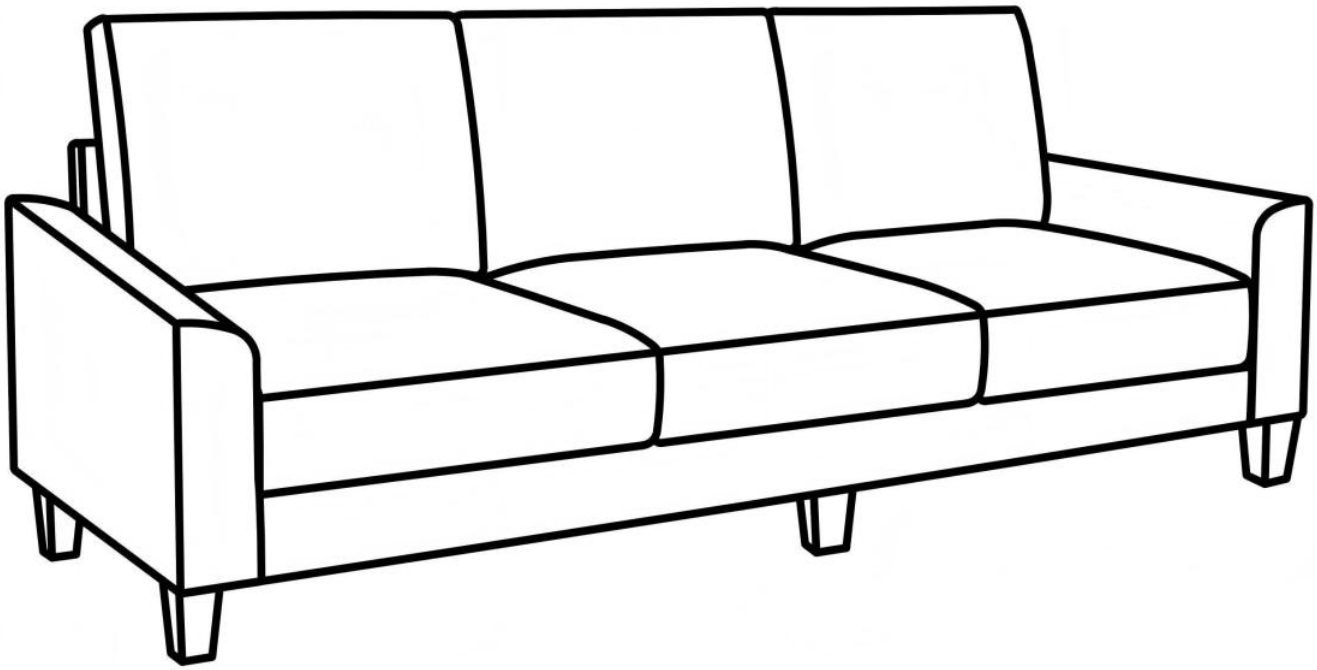

K	x 2
E	x 2

01

Remove accessories E from the inside of accessory K.

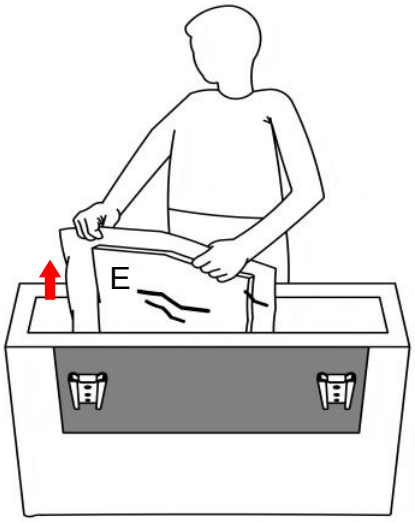

K-R

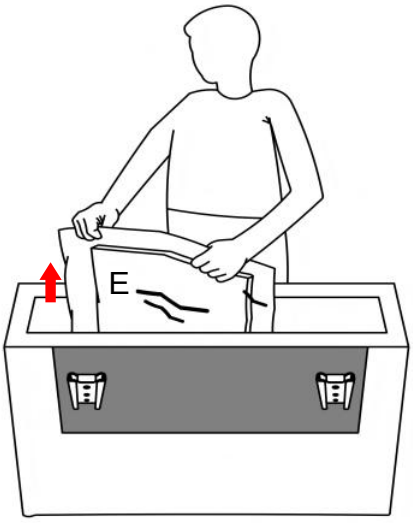

K-L

02

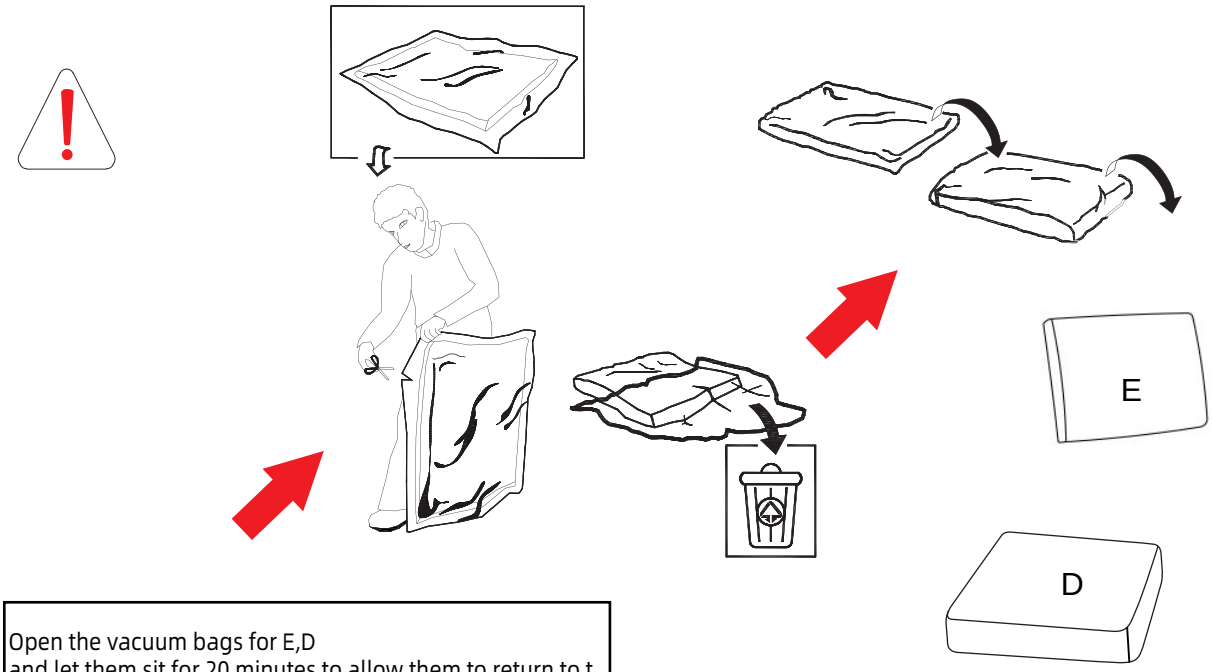

Open the vacuum bags for E,D
and let them sit for 20 minutes to allow them to return to t
heir natural shape.
If there are wrinkles on the surface of the product,
please use an iron to smooth them out.

Note: When using a knife or scissors to open the
packaging, be careful not to damage the product.

A	x1
B	x1
G	x2
H	x4
N	x1

03

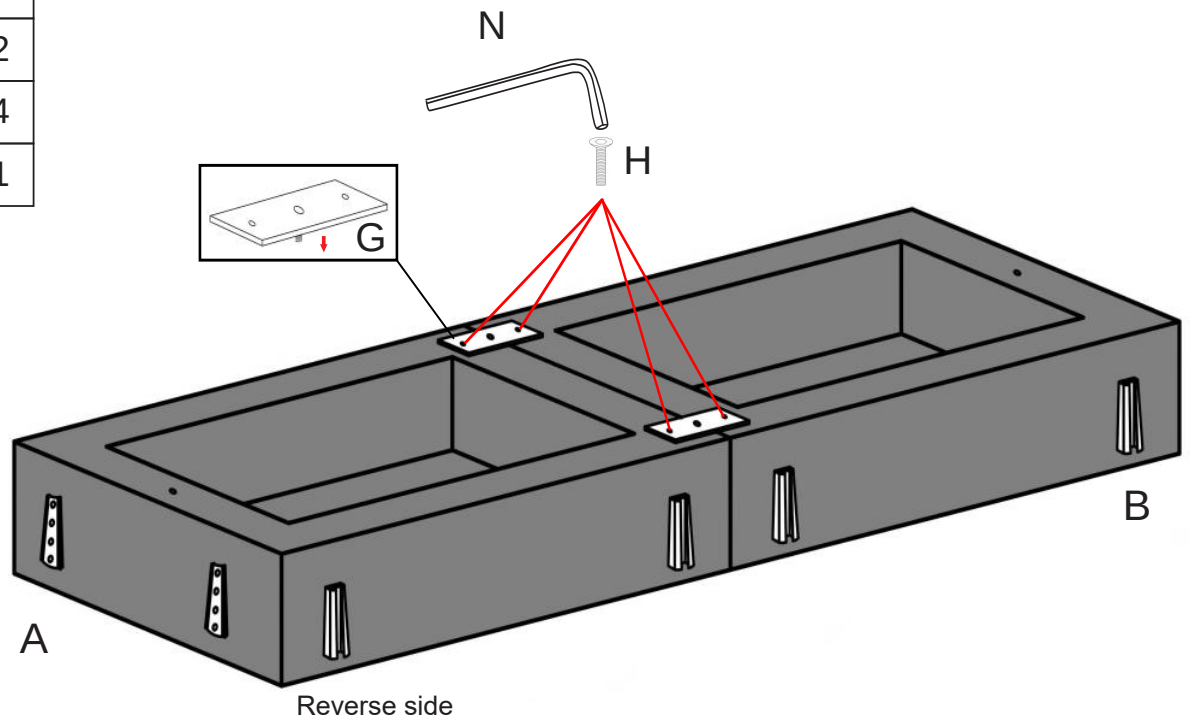

C	x2
U	x2

04

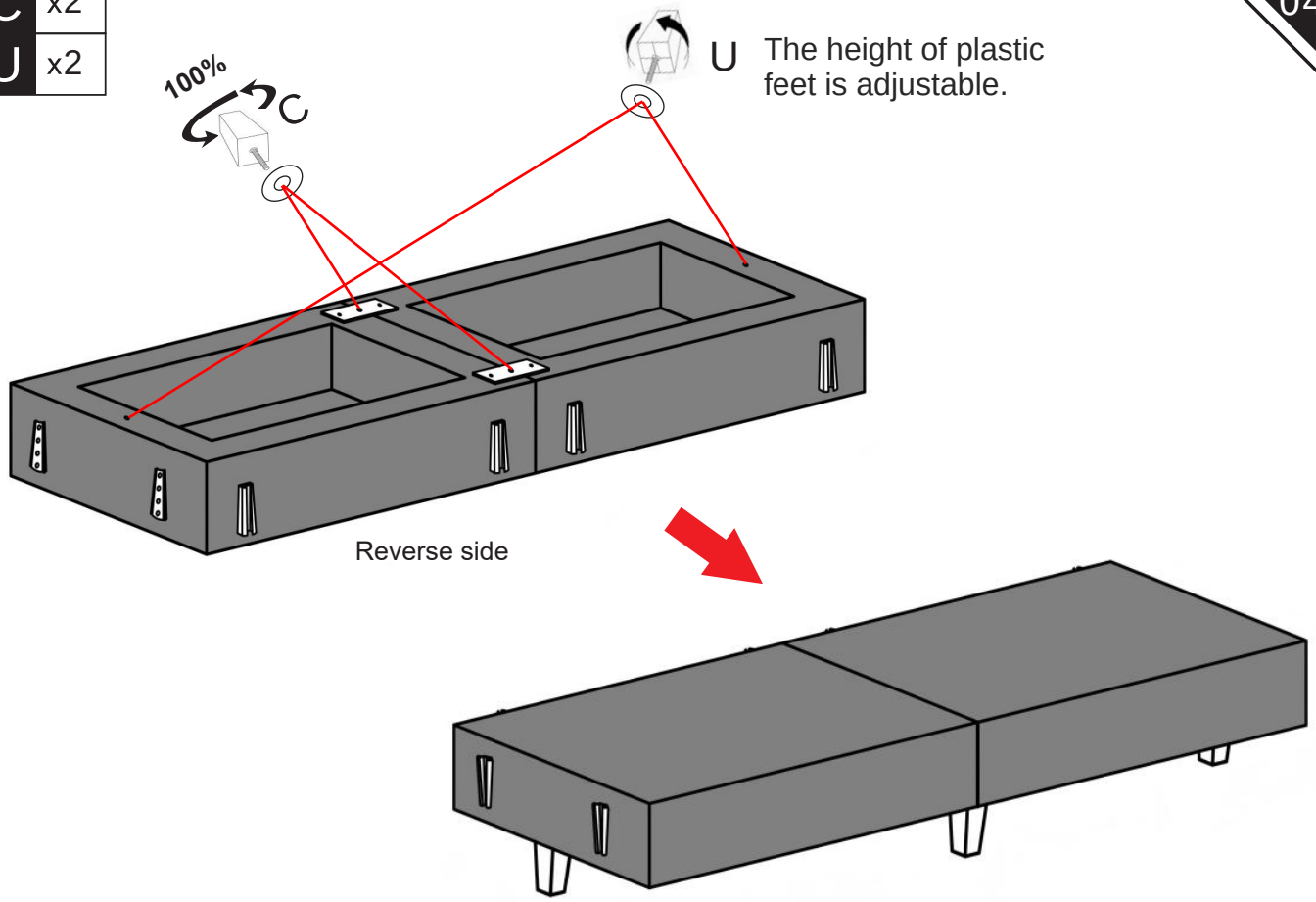

The height of plastic feet is adjustable.

J x 1

05

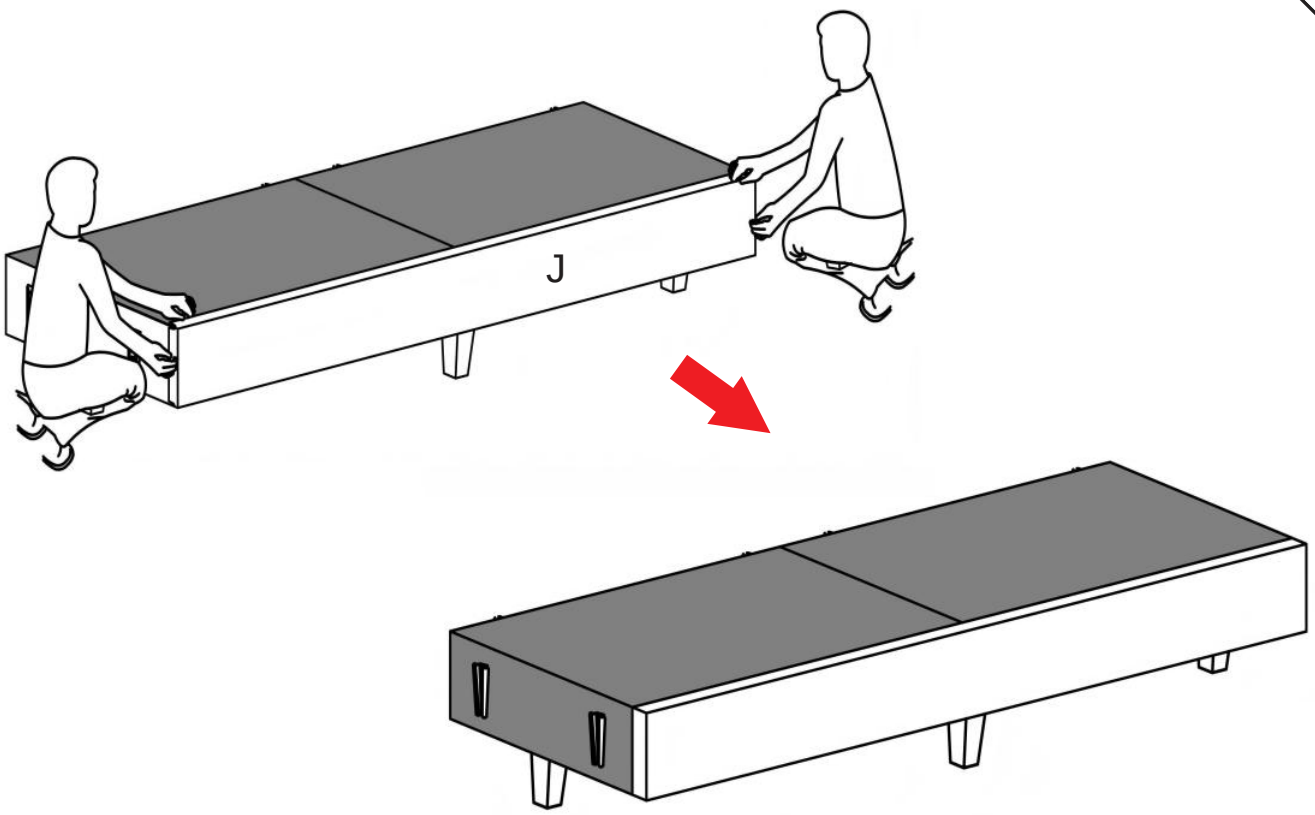

K x2

C x4

06

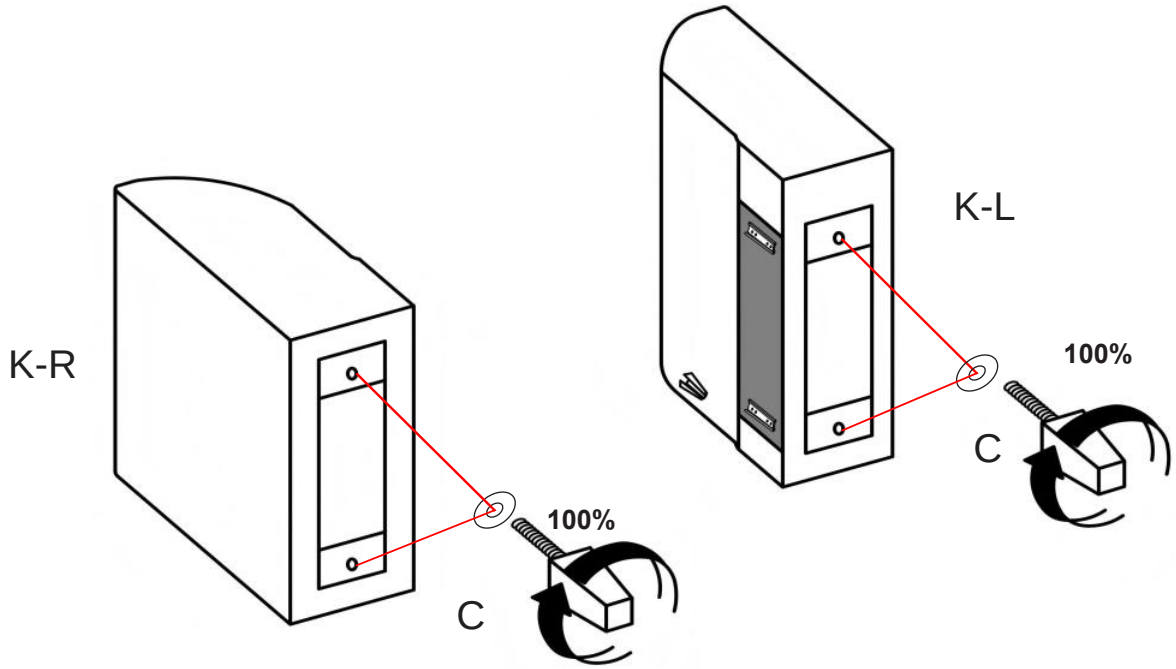

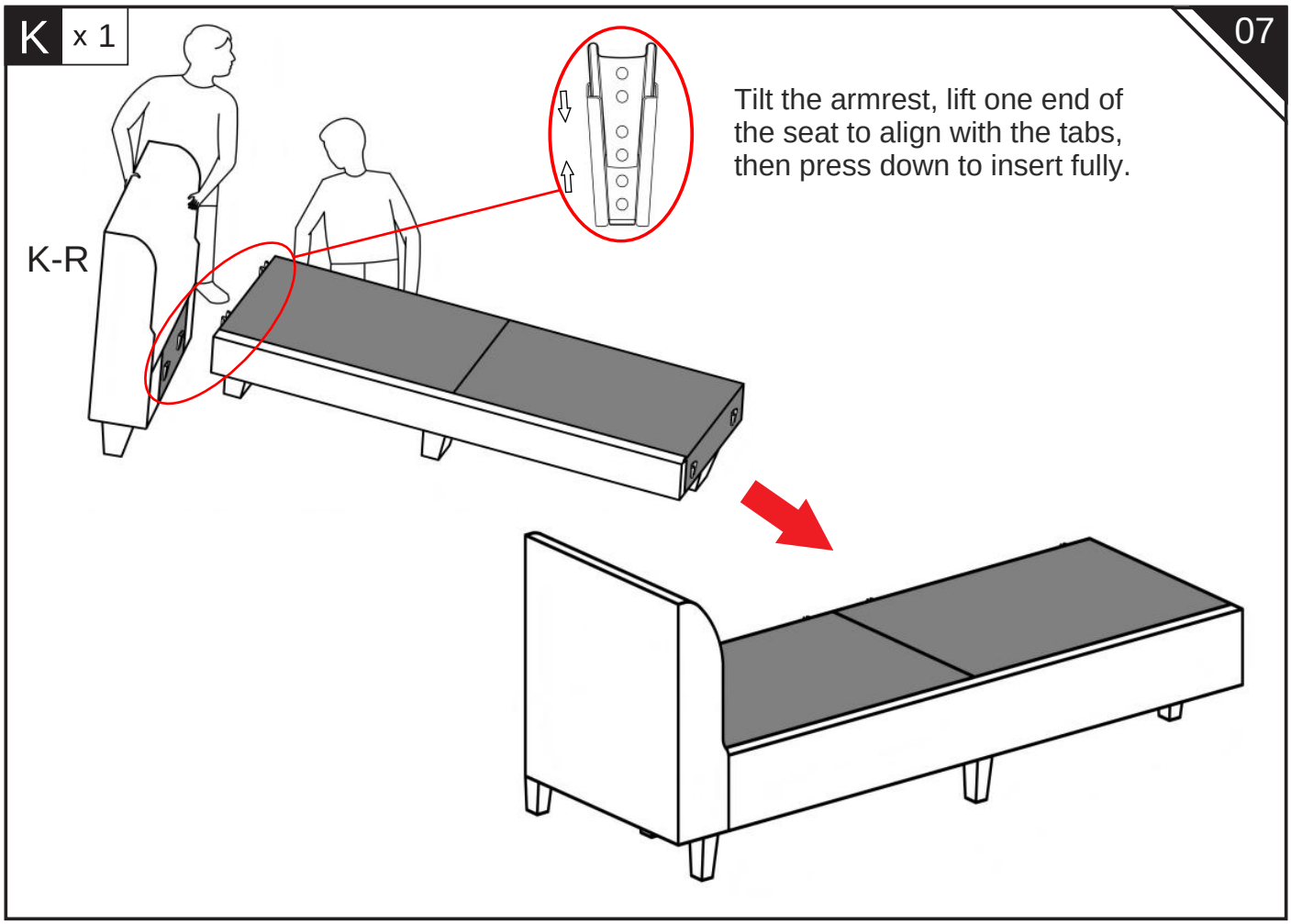
K x 1
07
K-R
Tilt the armrest, lift one end of the seat to align with the tabs, then press down to insert fully.

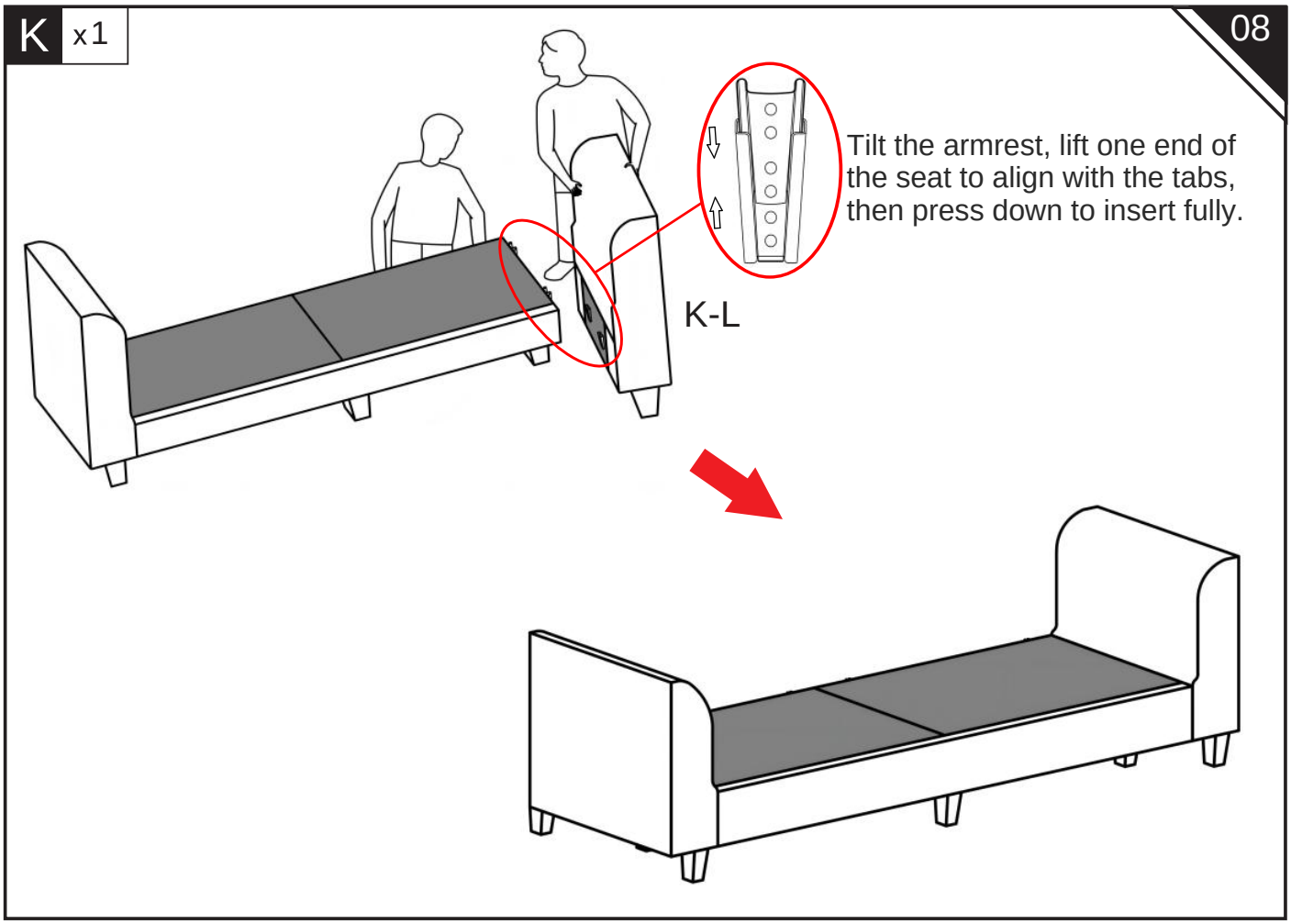
K x1
08
K-L
Tilt the armrest, lift one end of the seat to align with the tabs, then press down to insert fully.

F x 1

09

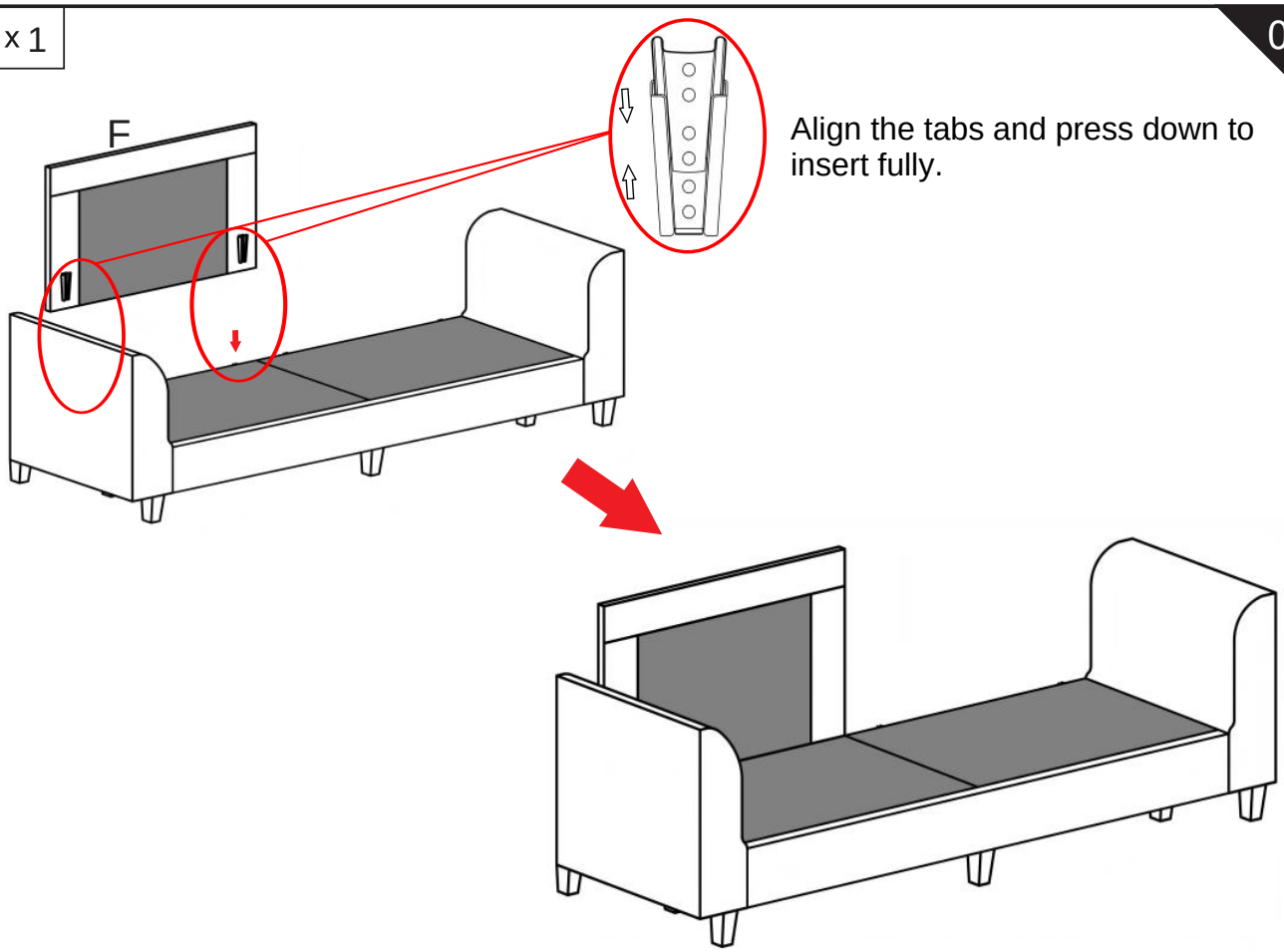

Align the tabs and press down to insert fully.

F x 1

10

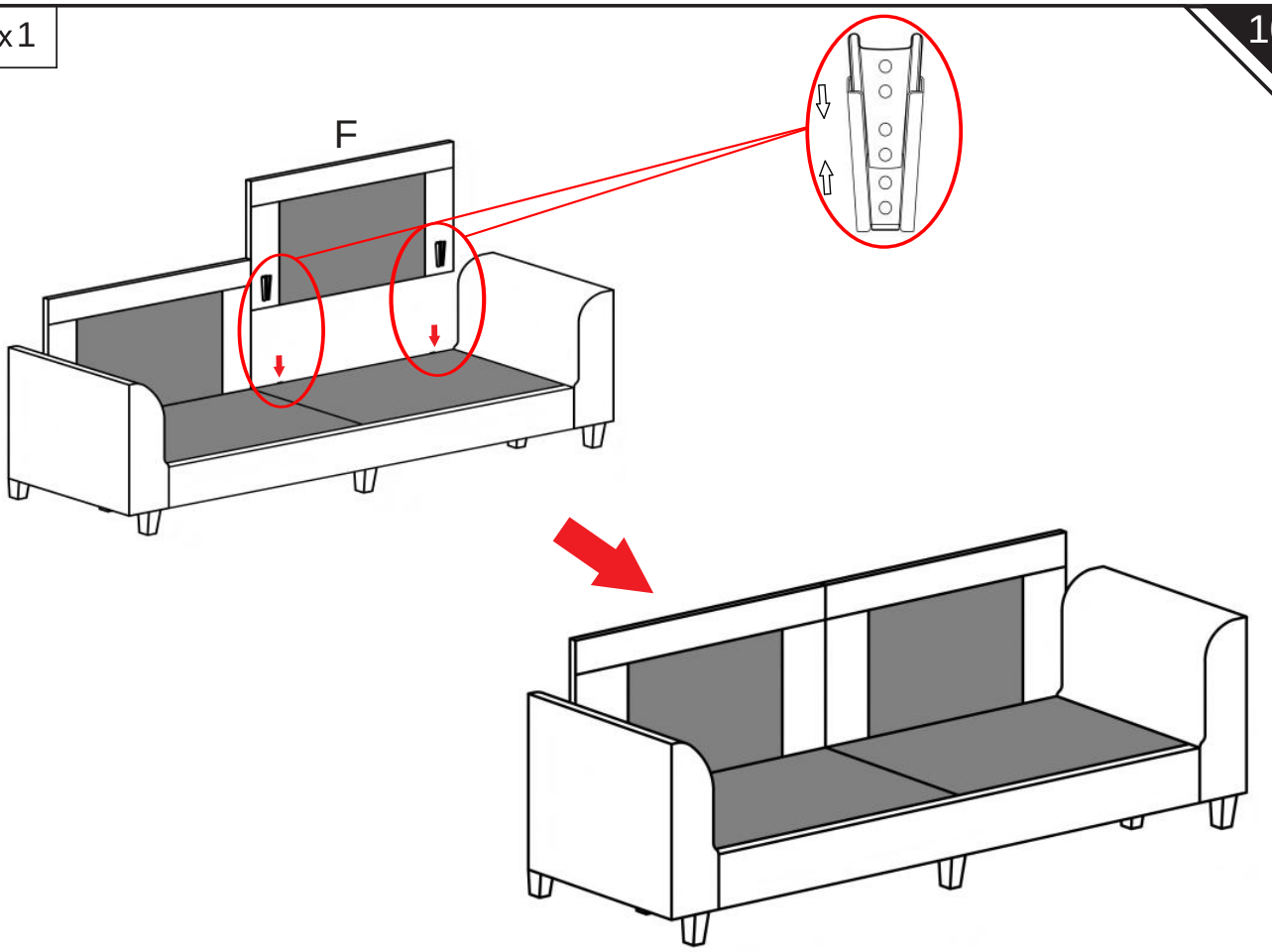

Place the pedals and cushions as shown in the picture

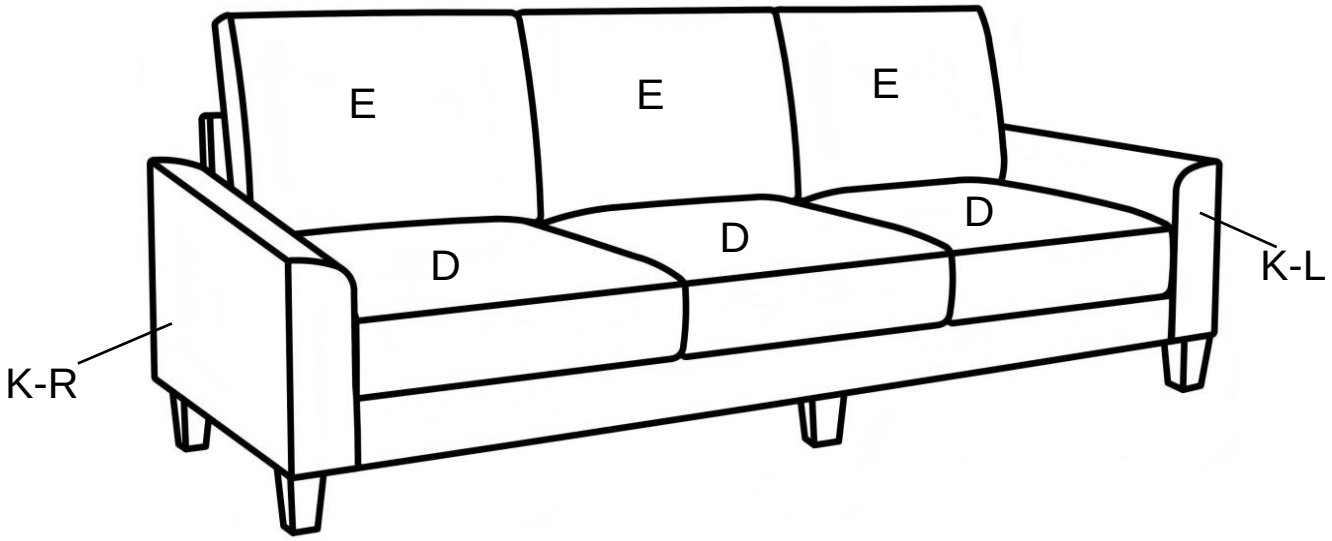

PLEASE NOTE

Read all instructions before assembly. Save the assembly instructions for future use.Before each use or a ssembly, check for damaged hardware and missing parts. If replace-ment parts and instructions are needed,co ntact the manufacturer at service@wyidaseat. com Do not use replacement parts, and periodically check the tig h tness and location of fasteners and screws.

FOOTREST INSTALLATION GUIDE

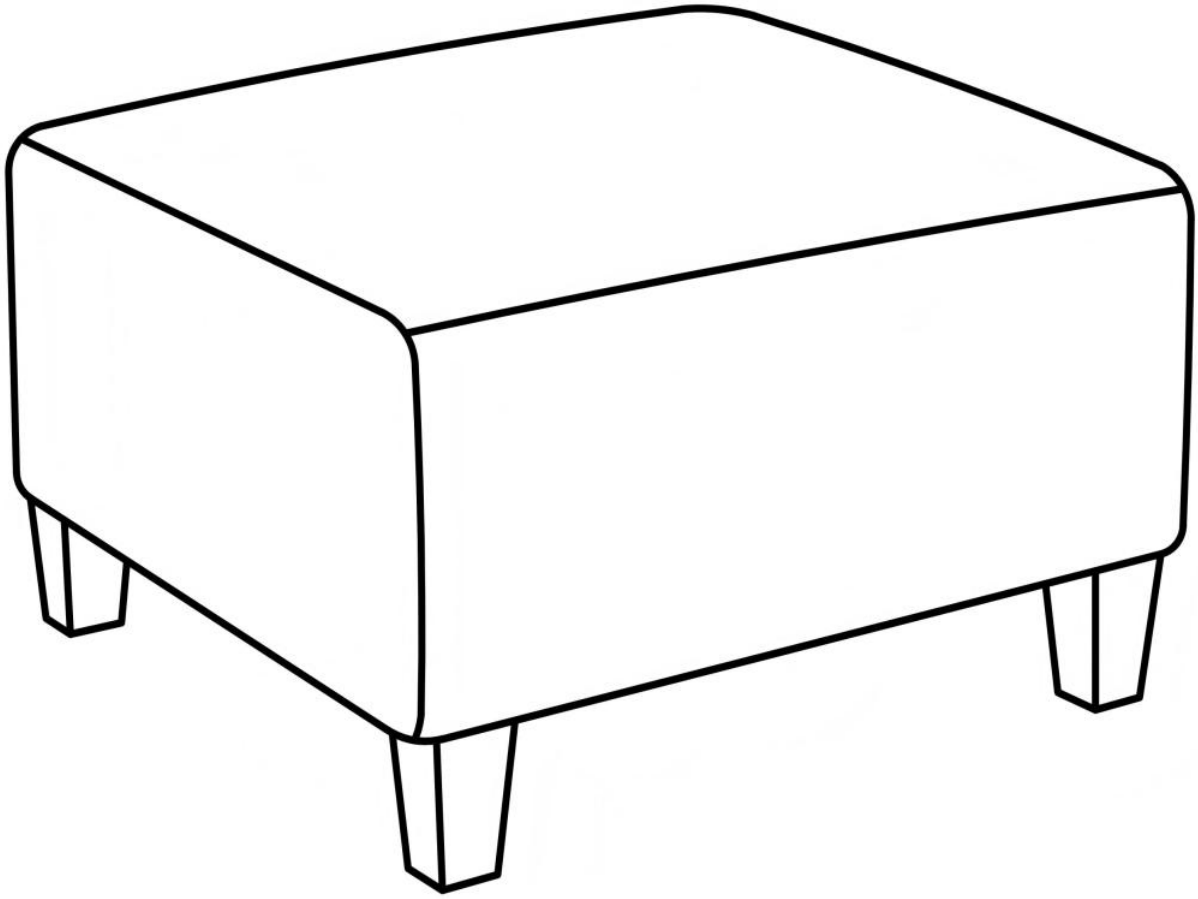

01

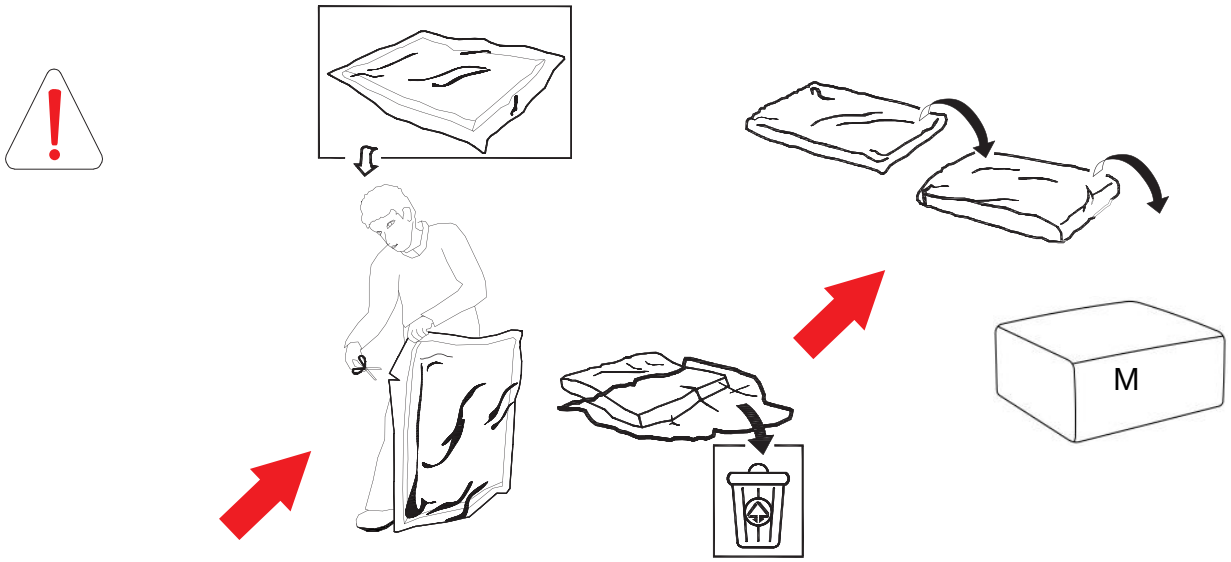

Open the vacuum bags for M
and let them sit for 20 minutes to allow them to return to t
heir natural shape.
If there are wrinkles on the surface of the product,
please use an iron to smooth them out.

Note: When using a knife or scissors to open the
packaging, be careful not to damage the product.

02

M	x1
C	x4

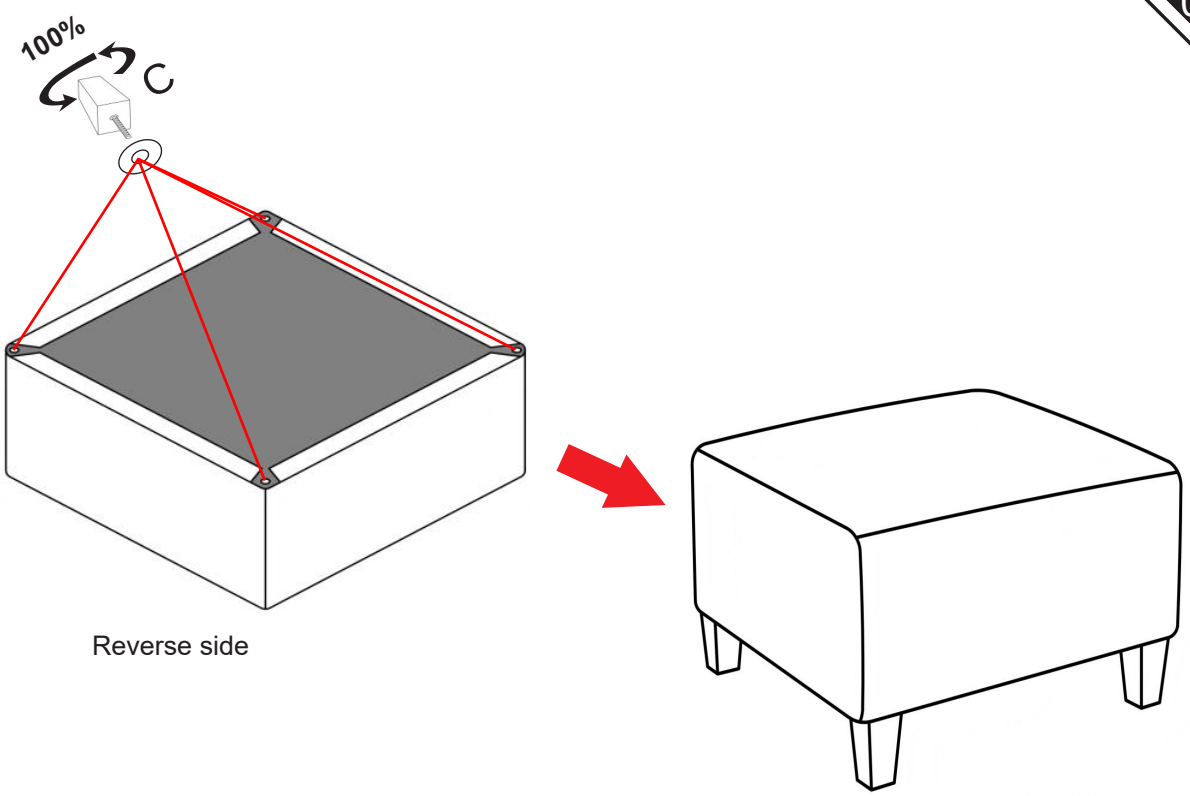
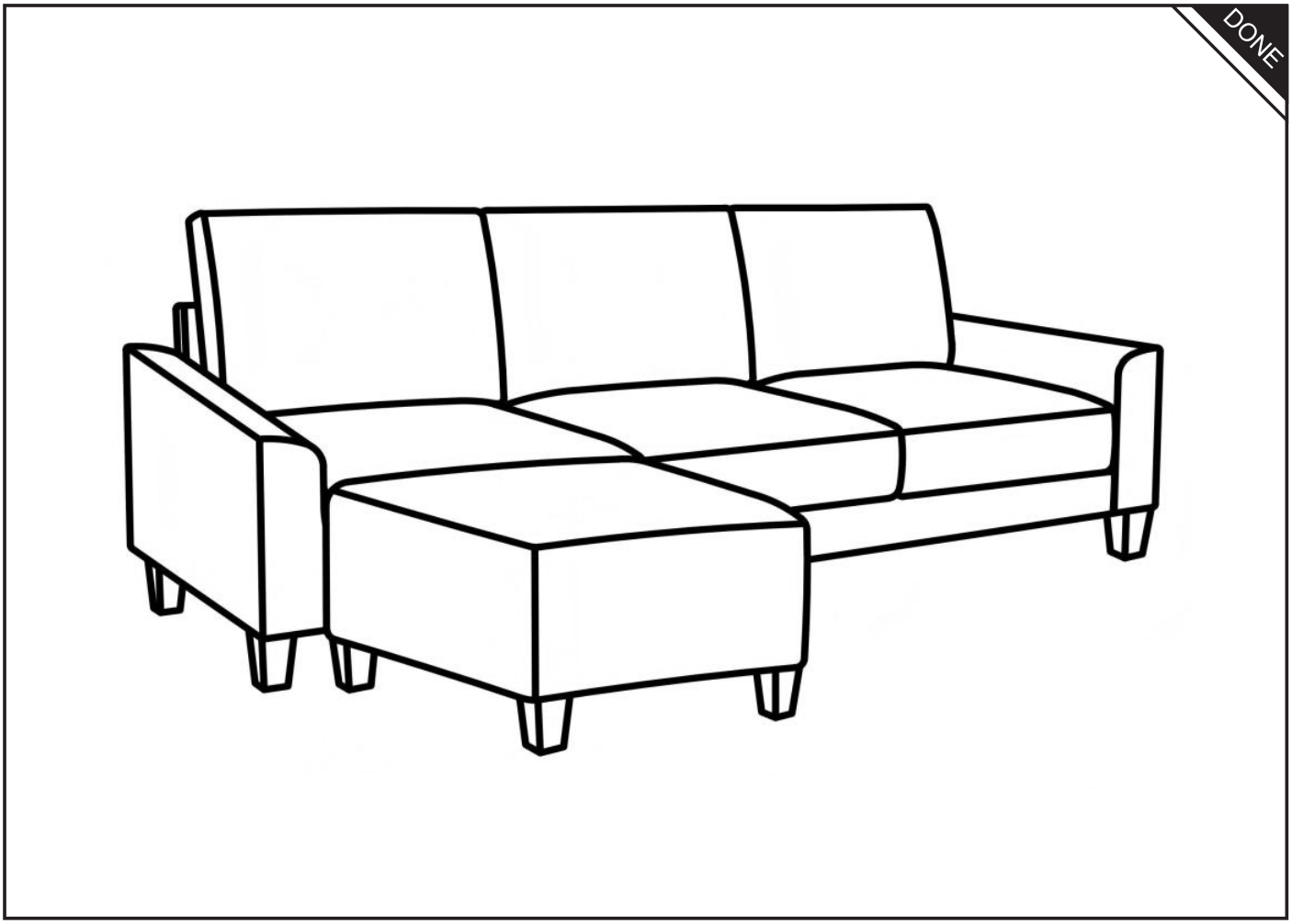
SECTION SHAP