Cloudure Sofa Assembly Instructions

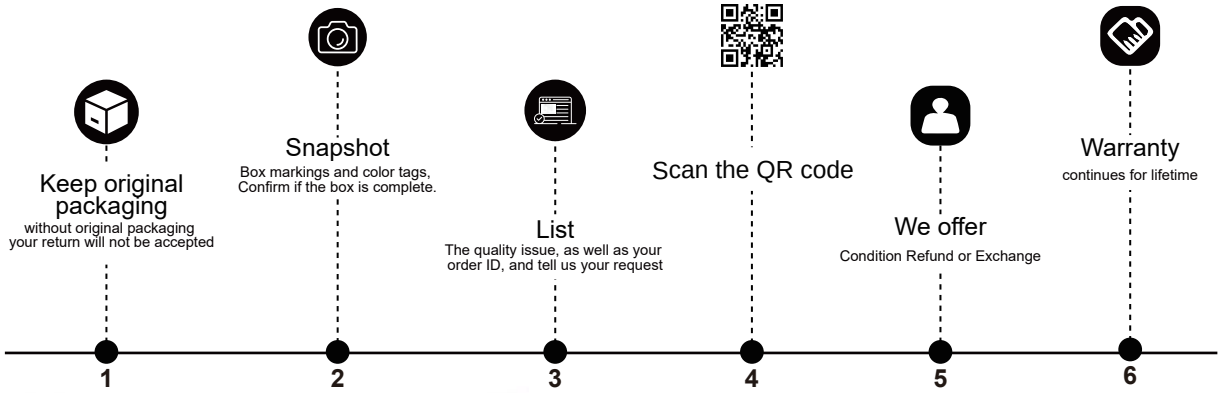

Technical Support

Extended Warranty

24/17 Customer Service

Membership Point Benefist

Return & Exchange Service

Installation Guides

Email:service@wyidaseat.com

2 Seat Sleeper Sofa

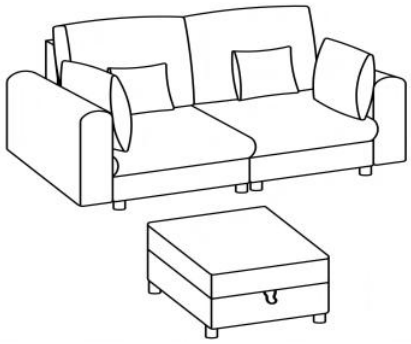

Part A + Part B + Part E

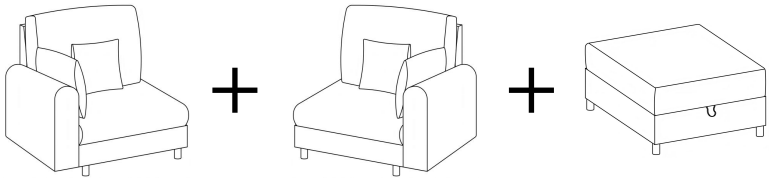

3 Seat Sleeper Sofa

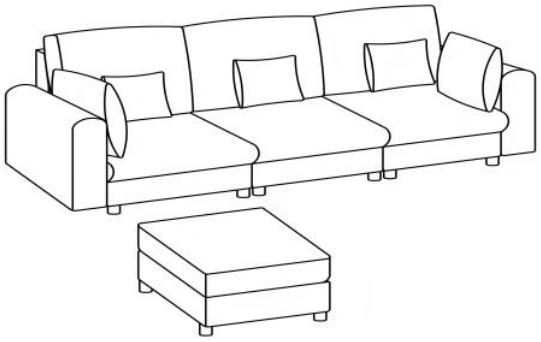

Part A + Part B + Part C

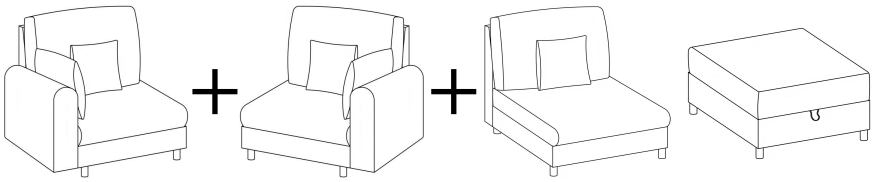

3 Seat Sleeper Sofa

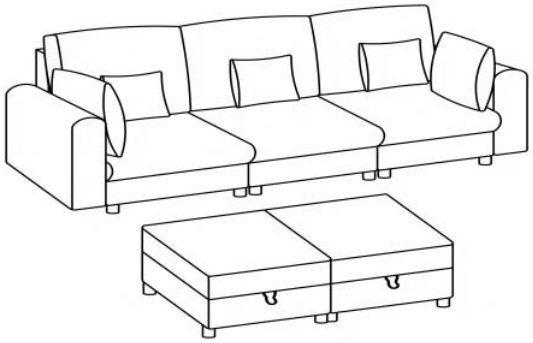

Part A + Part B + Part C + Part E

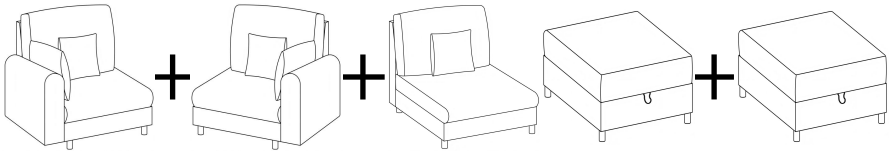

4 Seat Sleeper Sofa

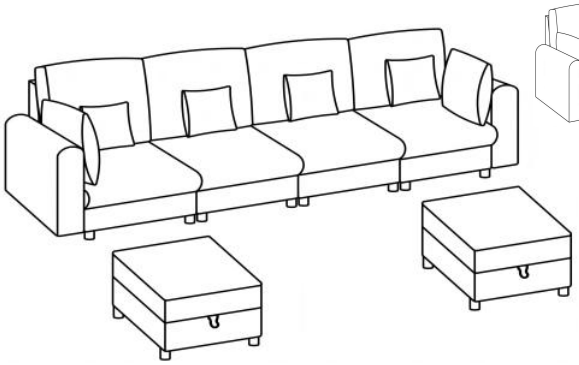

Part A + Part B + Part C + Part F + Part E

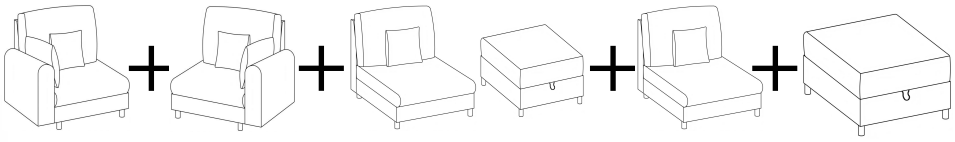

Your order will be shipped in multiple packages, so the delivery times might vary. Thanks for your patience!

We recommend two people for quicker installation.

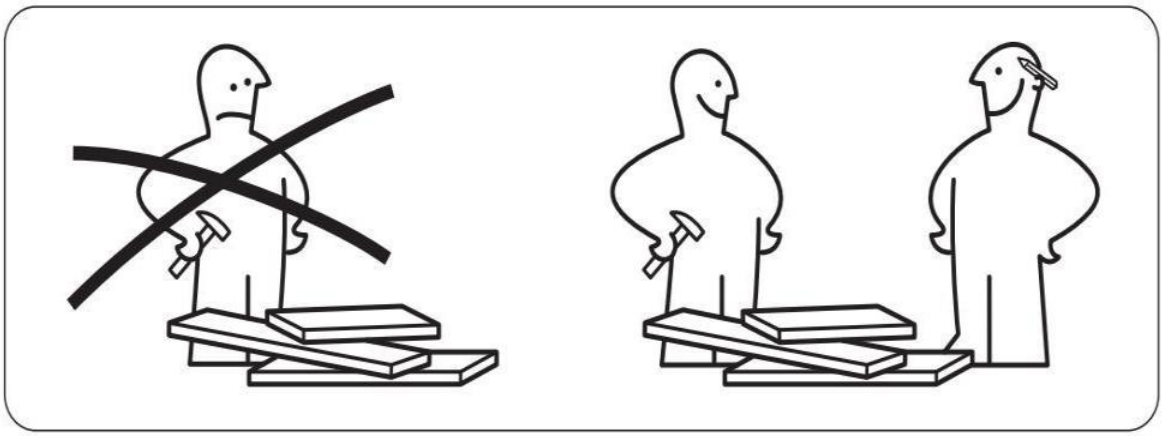

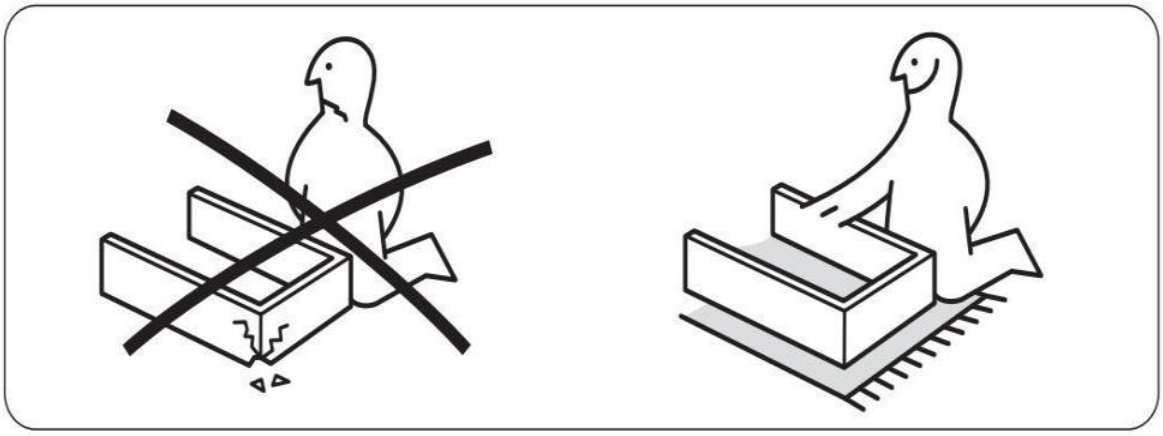

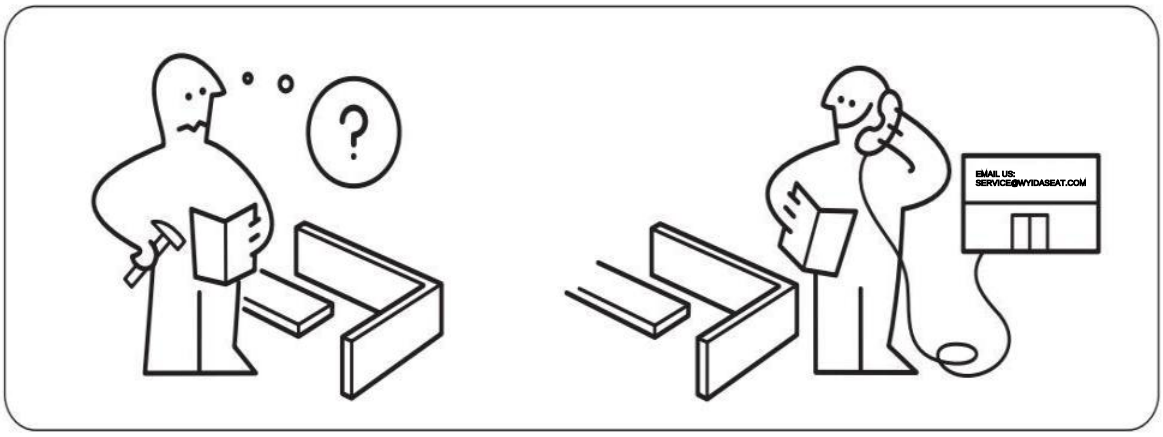
?
EMAIL US:
SERVICE@WYIDASEAT.COM

[EN]
Warning: Please read these instructions fully before starting assembly.Check you have all the components and tools listed on pages.Keep the instructions for later reference. Parts of the assembly will be easier with 2 people.Seek professional assistance if necessary.
Warning: Please place all parts on a flat surface.Place a soft blanket or similar underneath to protect against scratches or stains. Avoid dragging or sliding components across the floor.
Warning: Regularly check all fittings and fastenings to ensure they are secure and to prevent accidents.If any parts are missing, broken, damaged, or worn, discontinue use of the product until repairs have been made using factory authorized parts.
Warning: Do not place furniture close to fire sources or high-temperature objects to avoid the risk of fire. Do not place furniture in damp environments to prevent material damage.
Warning: Clean furniture with a damp cloth or alcohol, avoid using cleaning agents containing corrosive chemicals.
Warning: Do not allow children to climb on the furniture as this may result in tipping and serious personal injury.Assemble the furniture away from the reach of children.
Warning:The sponge and cloth may be squeezed and deformed during transportation, please don't worry, after you take it out of the bag, you can gently pat the sponge to speed up the recovery of elasticity, or leave it for a few days, it can recover to its origina elasticity.
Warning: Fabrics can fade or change color in direct sunlight. Minimize direct sunlight exposure to extend the life of your furniture.

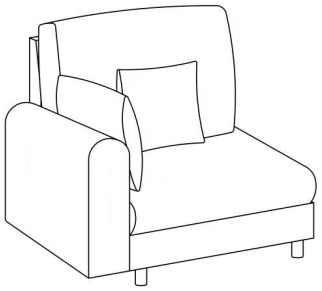

RIGHT ARM UNIT PART LIST

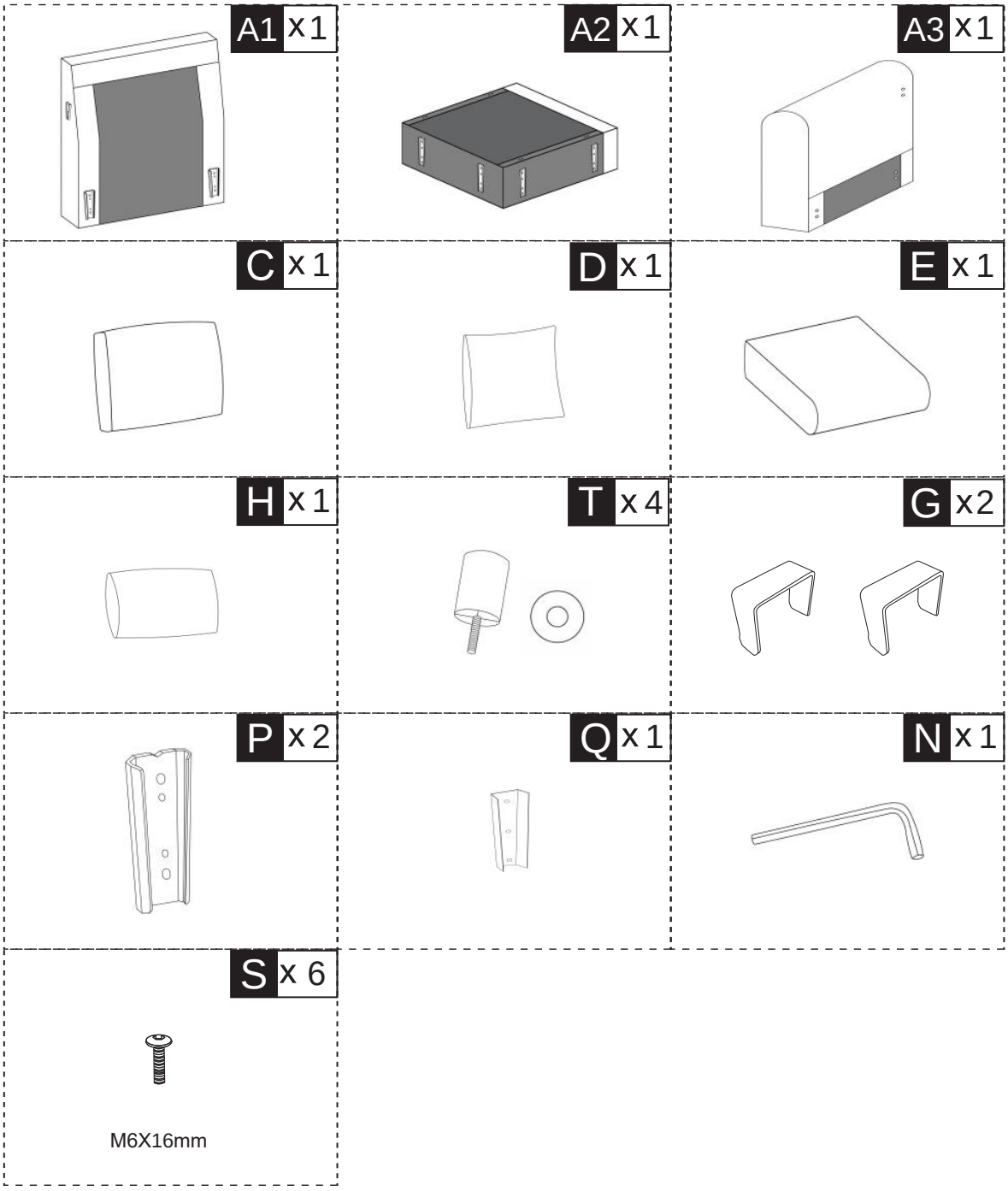

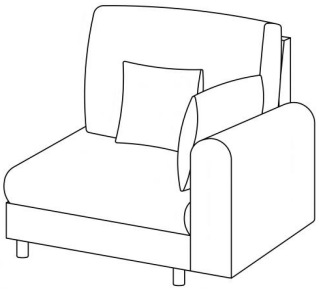

LEFT ARM UNIT PART LIST

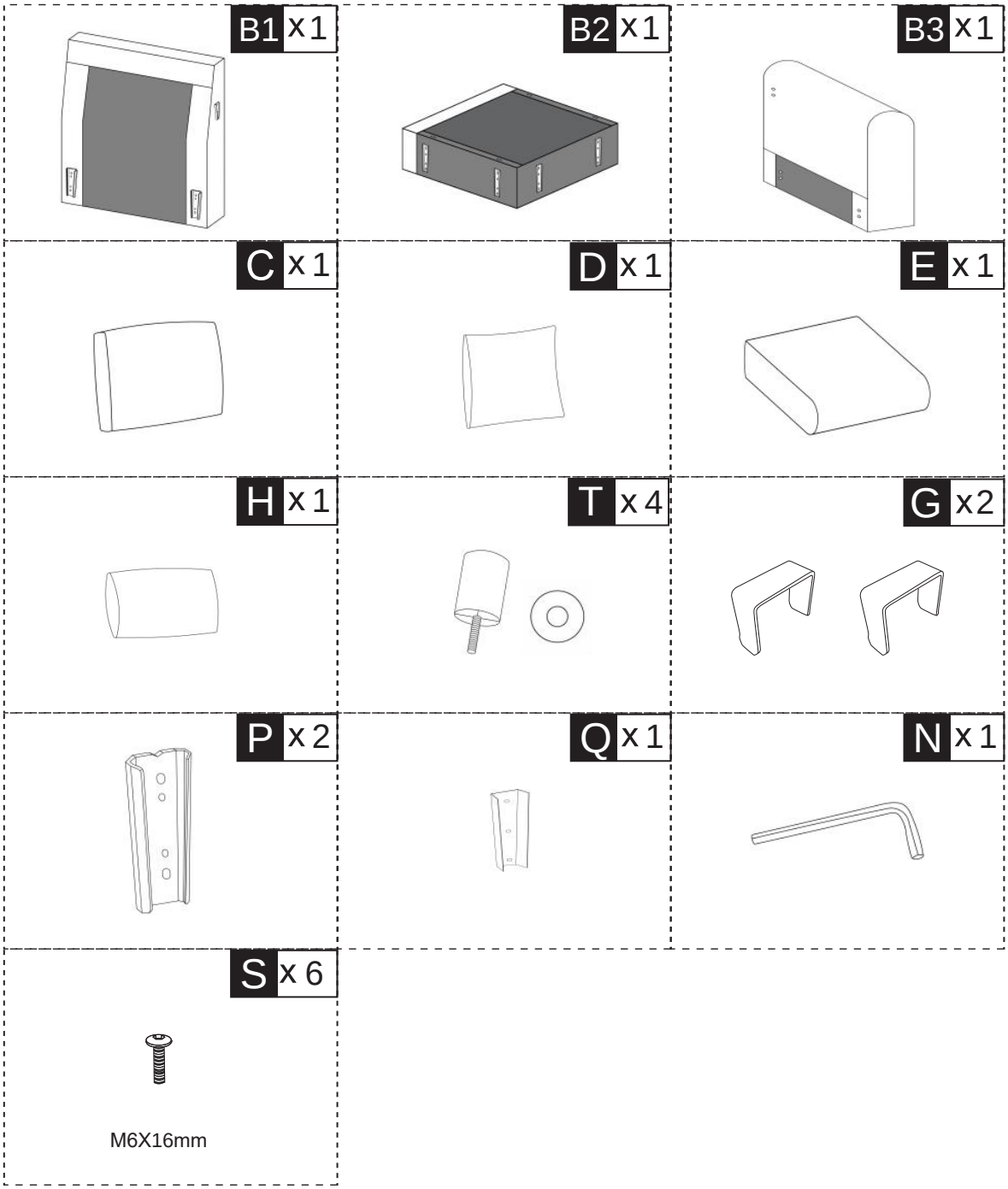

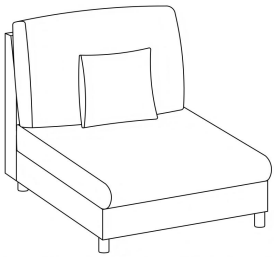

SEAT PART LIST

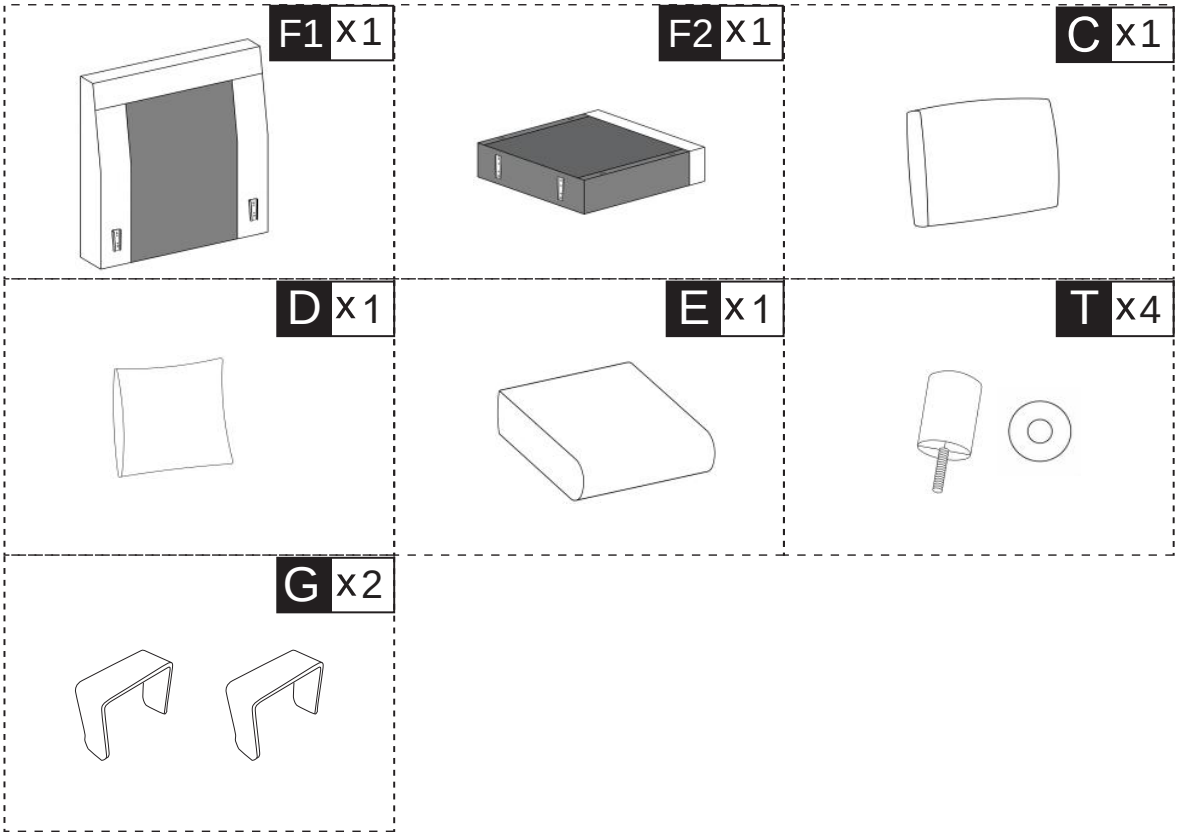

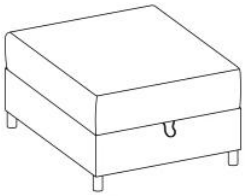

FOOT PART LIST

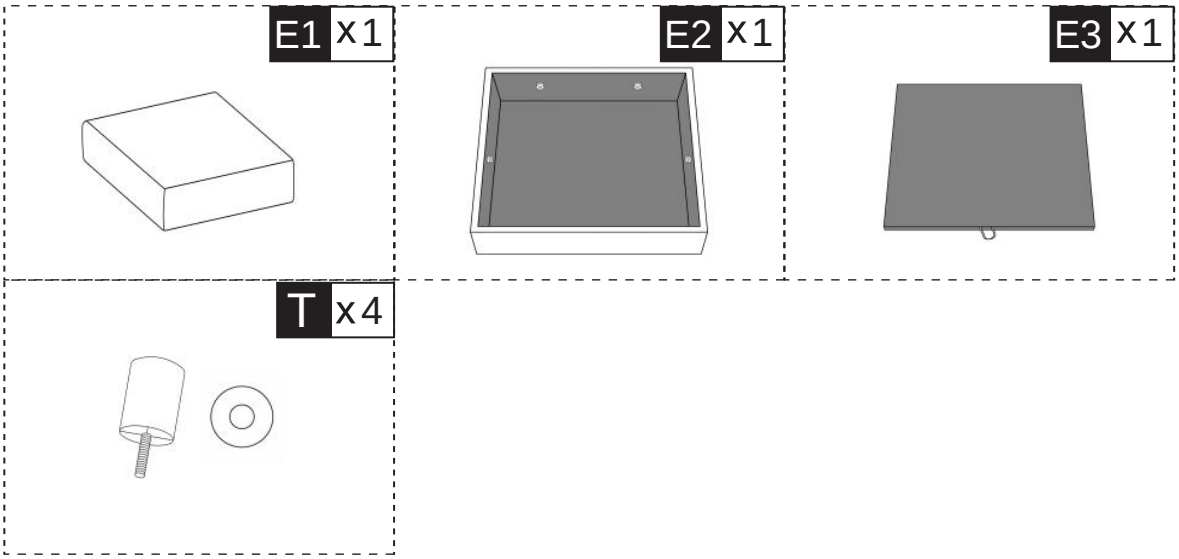

Compressea ana naturaly viscoelasticin a vacuum package, so it may takesome time to fully expand or it may feela little sticky; the foam may sticktogether after opening the vacuumpackage, so it should be carefullyseparated by hand after beingallowed to fully expand

Product Care Instructions

How to Unpack & Restore Your Memory Foam Product

Memory Foam

Made of quality shredded memory foam for durability: it maintains good expansion and shape retention to ensure your comfort during use

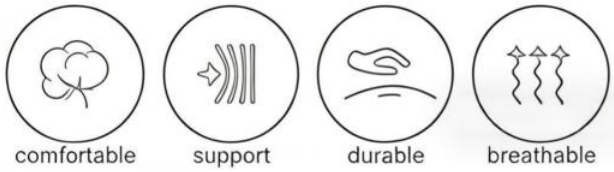

Product Care Instructions

Step One

Unpacking

Open the vacuum bags at the designated positions and begin the restoration process.

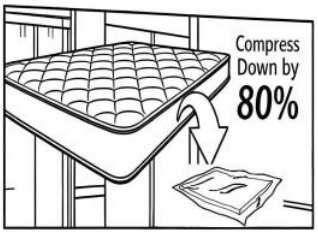

Open Vacuum Bags

Carefully open the vacuum bags at positions C, D, E, H, A3, B3, E1

Gently Pat

Lightly pat the product to help air begin entering the compressed memory foam.

Why This Step Matters

This orudal thst step Initares the restoration process, allowing compressed foam to stert expanding

Step Two

Full Restoration Patience is Key

Allow approximately 72 hours for complete air circulation and full expansion.

- Product expands gradually
- Restores to original shape
- Achieves full volume & comfort

Step Three

Removing Wrinkles

If wrinkles appear on the product surface, use an iron to smooth them out.

Use an Iron

Gently iron the surface to remove any wrinkles that may have formed during packaging.

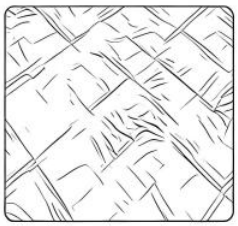

Ironing Tips

- Use low to medium heat setting
- Iron gently without applying heavy pressure
- Use a protective cloth if needed

The Result

Your product will look its best, maintaining a pristine appearance and smooth texture.

Important Notice

Safety First

When using a knife or scissors to open the packaging, please handle with care to avoid injury.

Safety Guidelines

- Always cut away from your body
- Keep hands clear of cutting path
- Use steady, controlled movements
- Keep away from children when using sharp tools

Our Priority

Your ssfety is our top concen, Take your tine and follow the guidelines for a sate, anipyable unboxing experience.

ARM SIDE UNIT INSTALLATION GUIDE

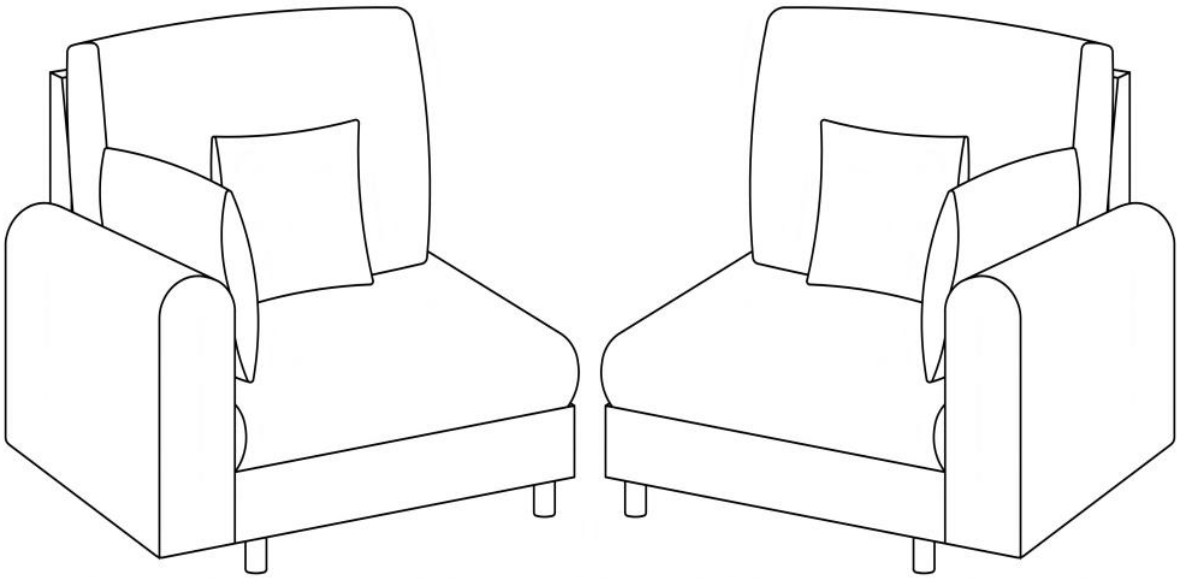

01

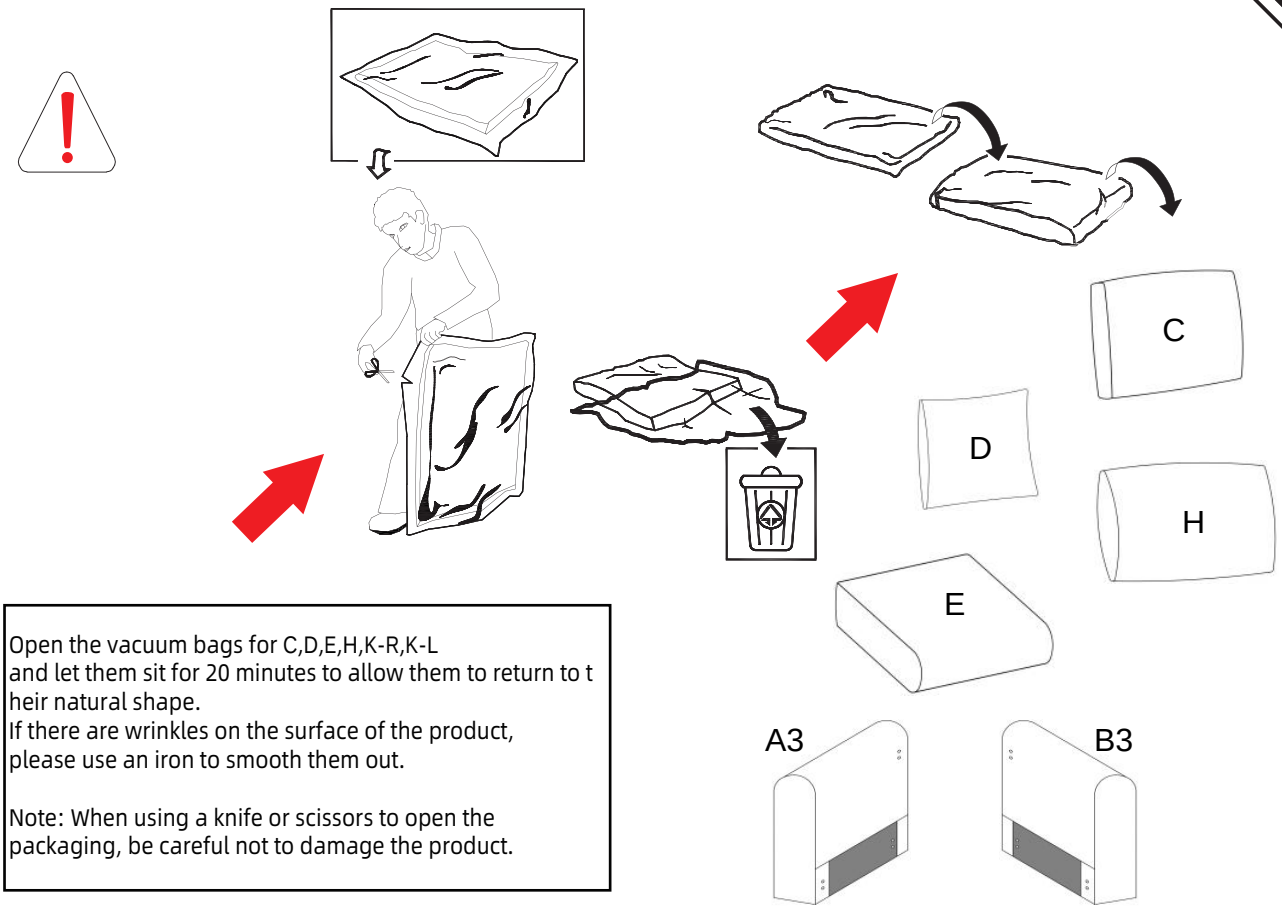

Open the vacuum bags for C,D,E,H,K-R,K-L
and let them sit for 20 minutes to allow them to return to t
heir natural shape.
If there are wrinkles on the surface of the product,
please use an iron to smooth them out.

Note: When using a knife or scissors to open the
packaging, be careful not to damage the product.

02

C	x 2
D	x 2
H	x 2

CAN REMOVABLE AND WASHABLE

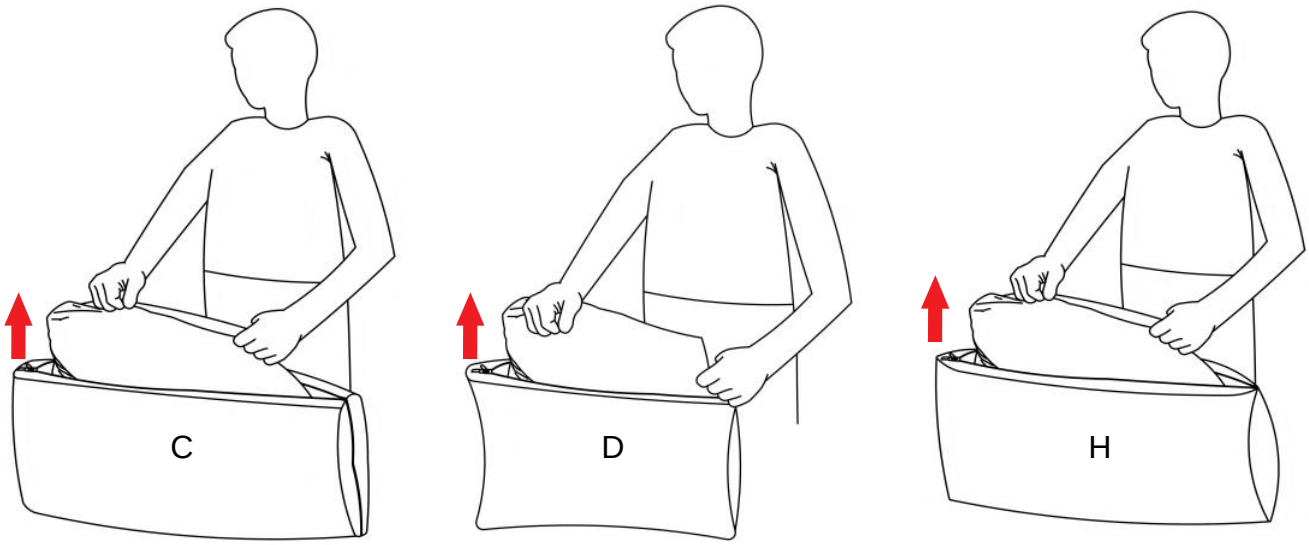

A2	x 1
B2	x 1
T	x 8

03

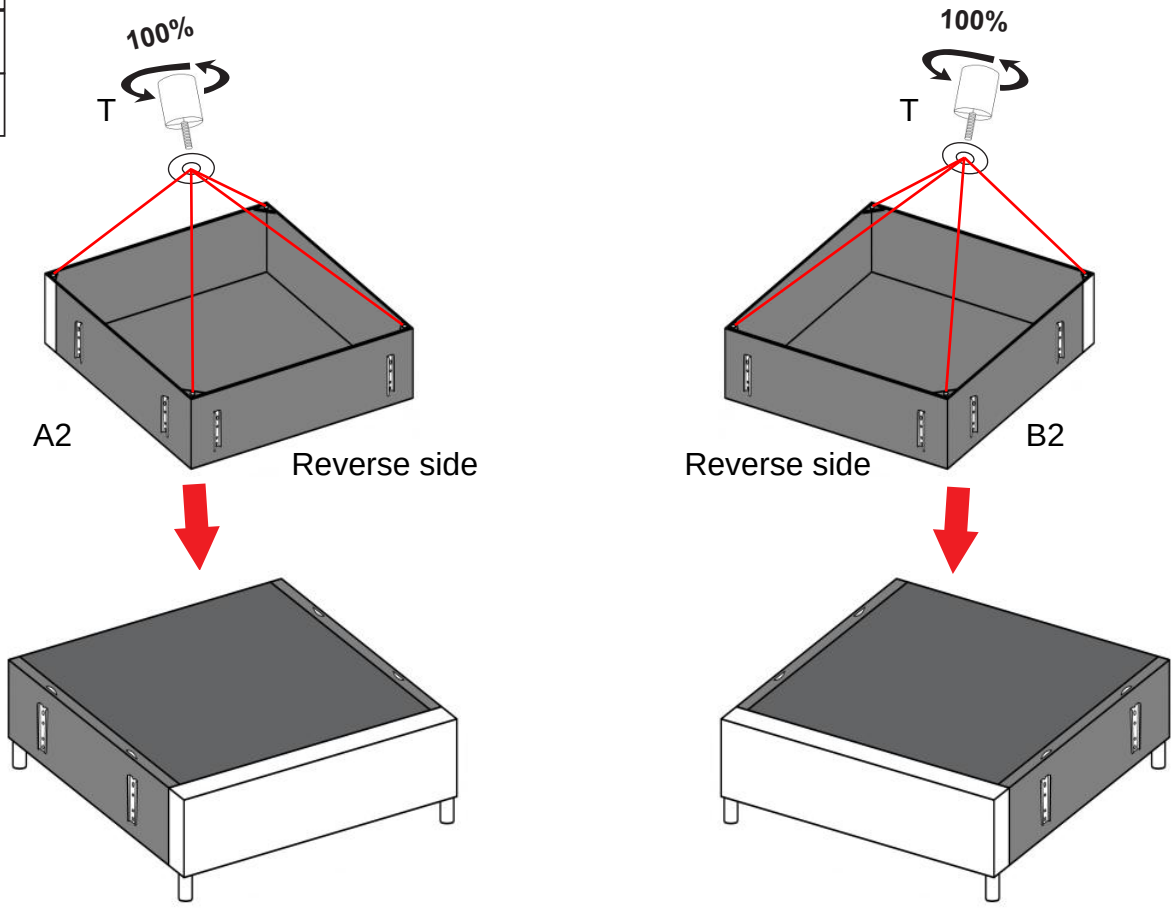

A1	x 1
A2	x 1
B1	x 1
B2	x 1

04

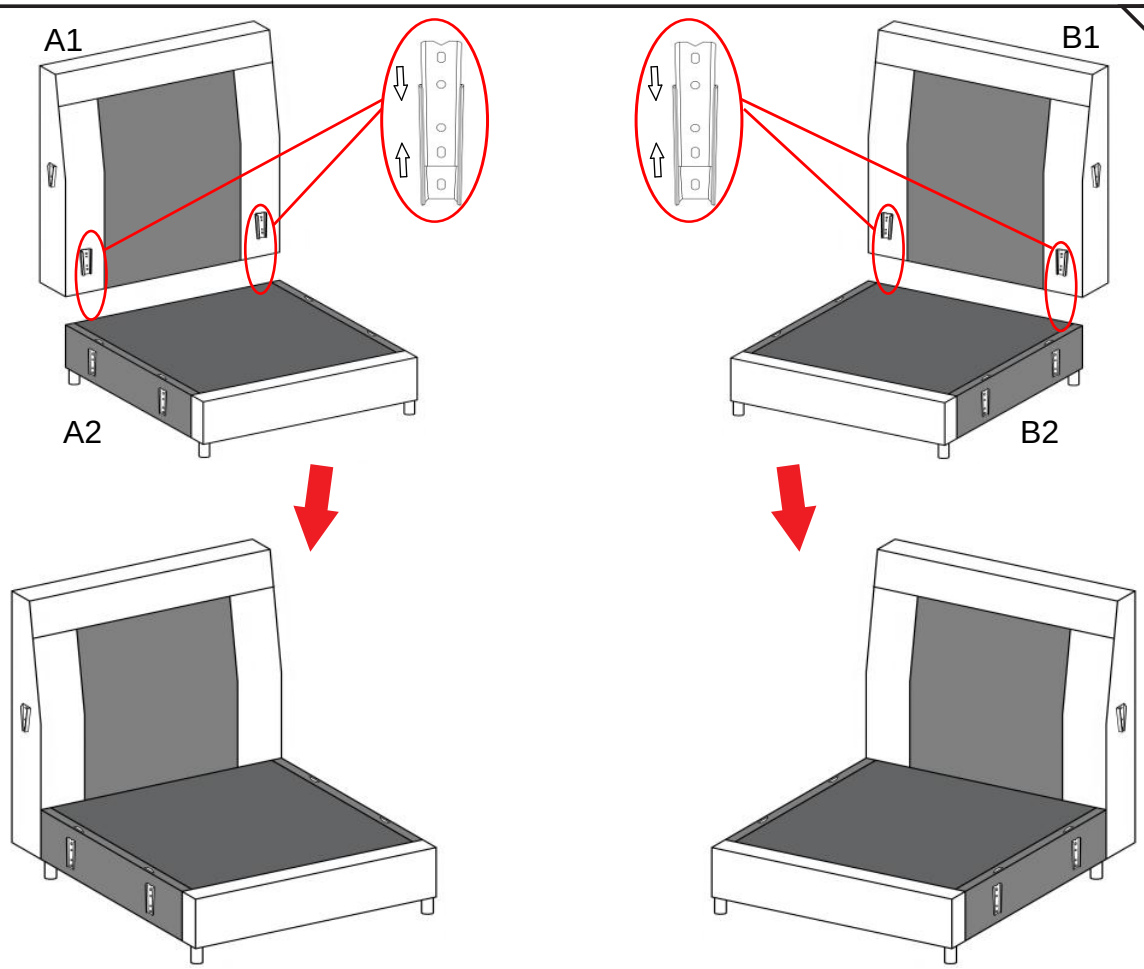

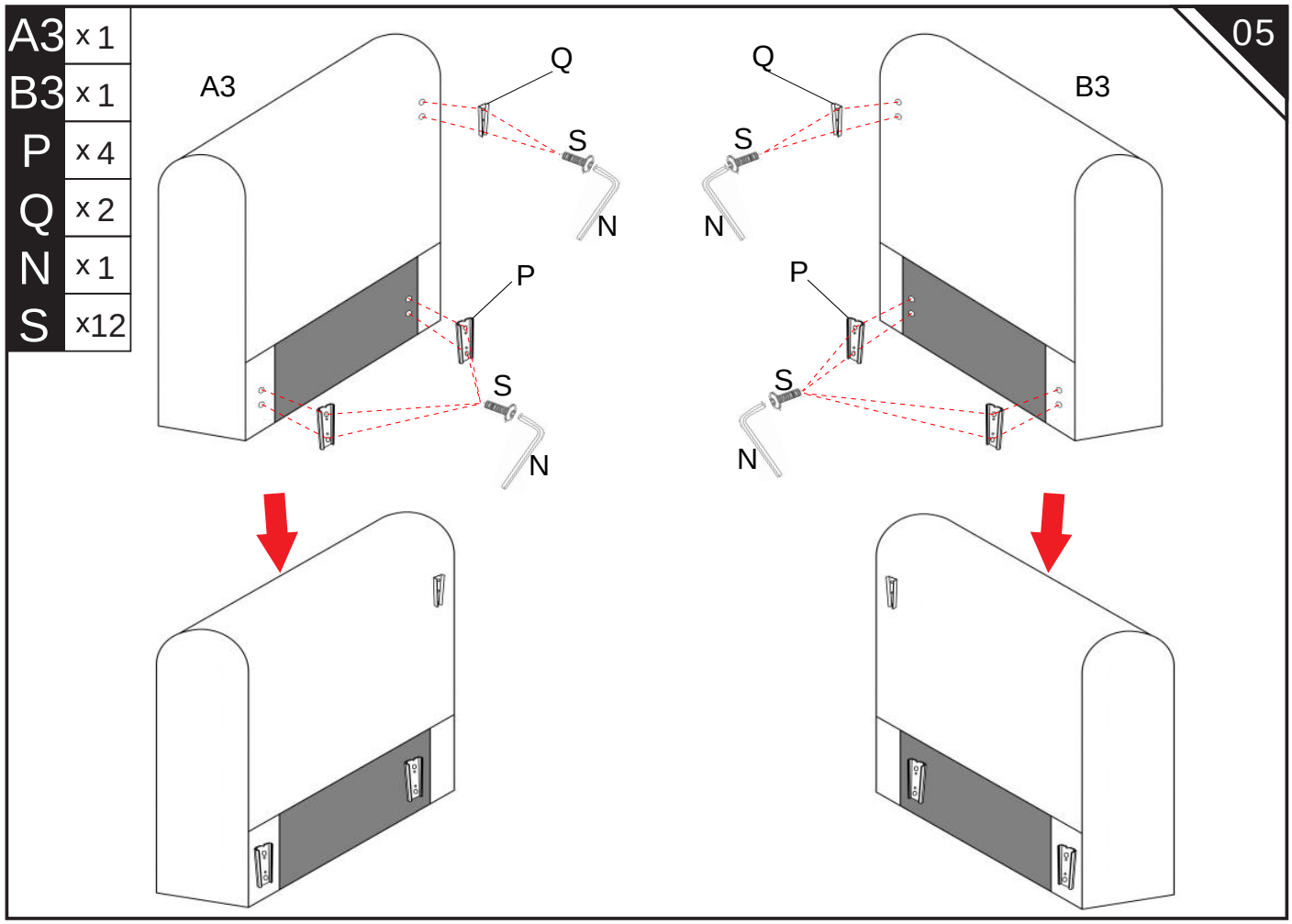
A3 x 1
B3 x 1
P x 4
Q x 2
N x 1
S x12
05
A3
Q
S
N
P
S
N
Q
S
N
B3
P
S
N

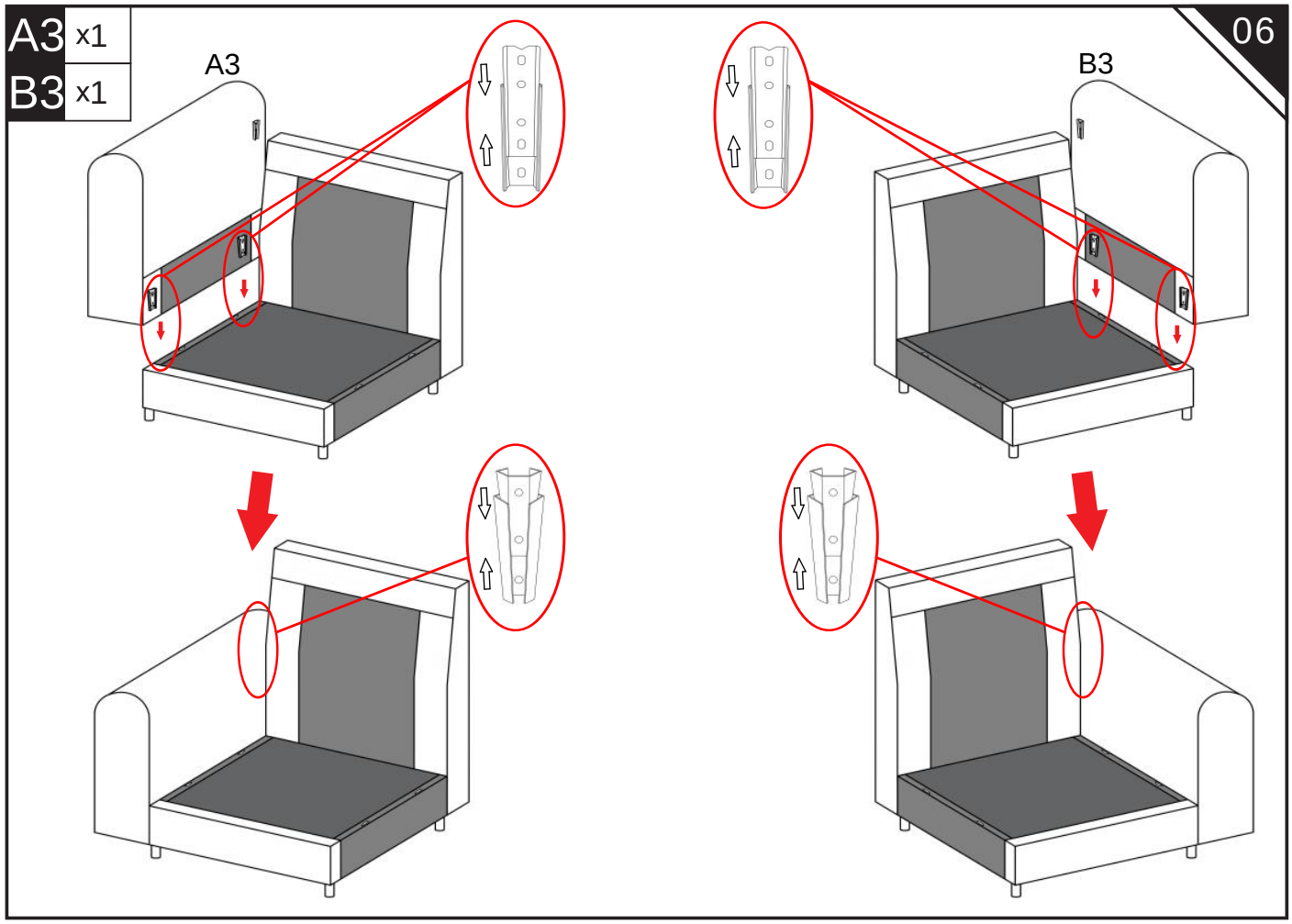
A3 x1
B3 x1
06
A3
B3

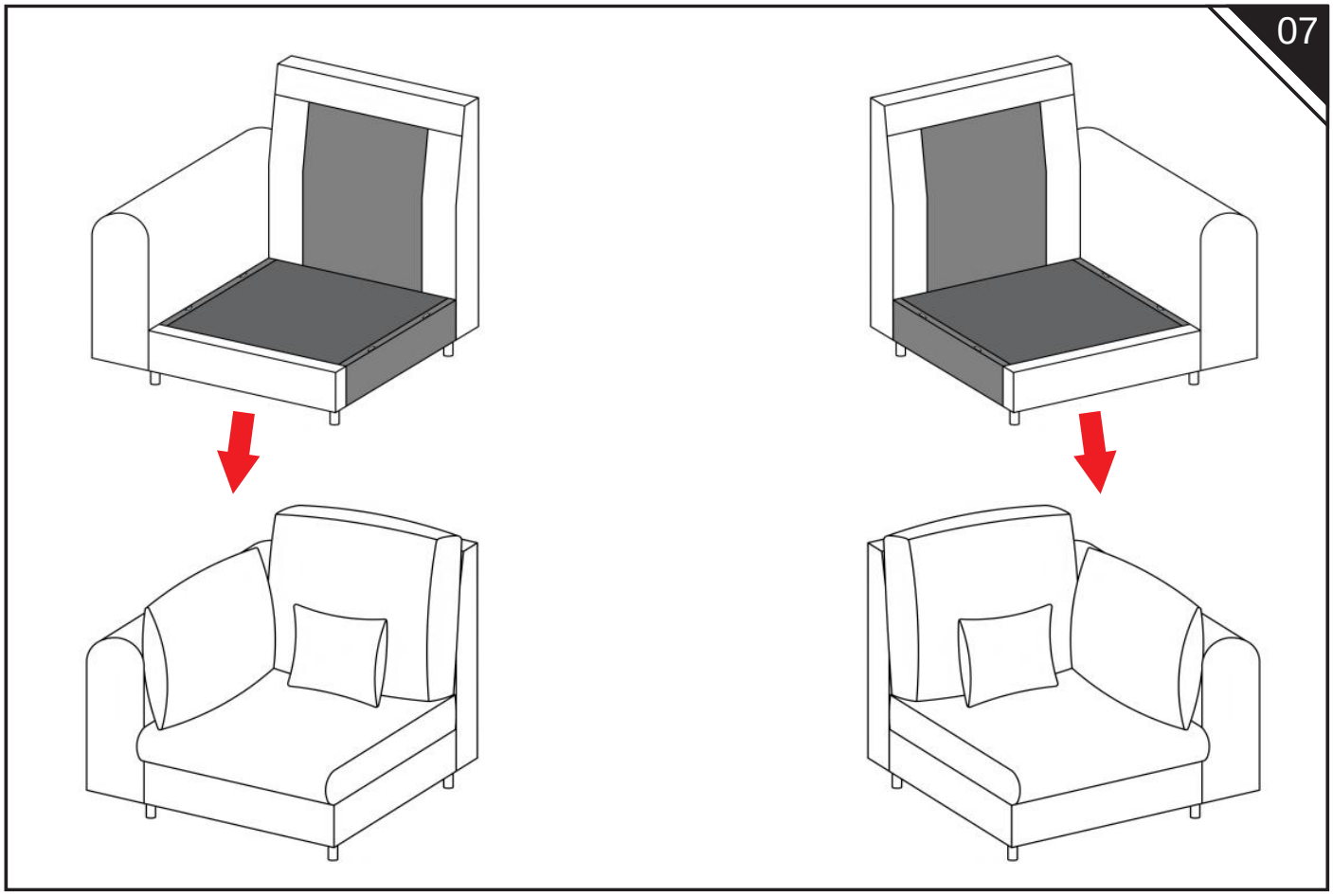
07

SEAT INSTALLATION GUIDE

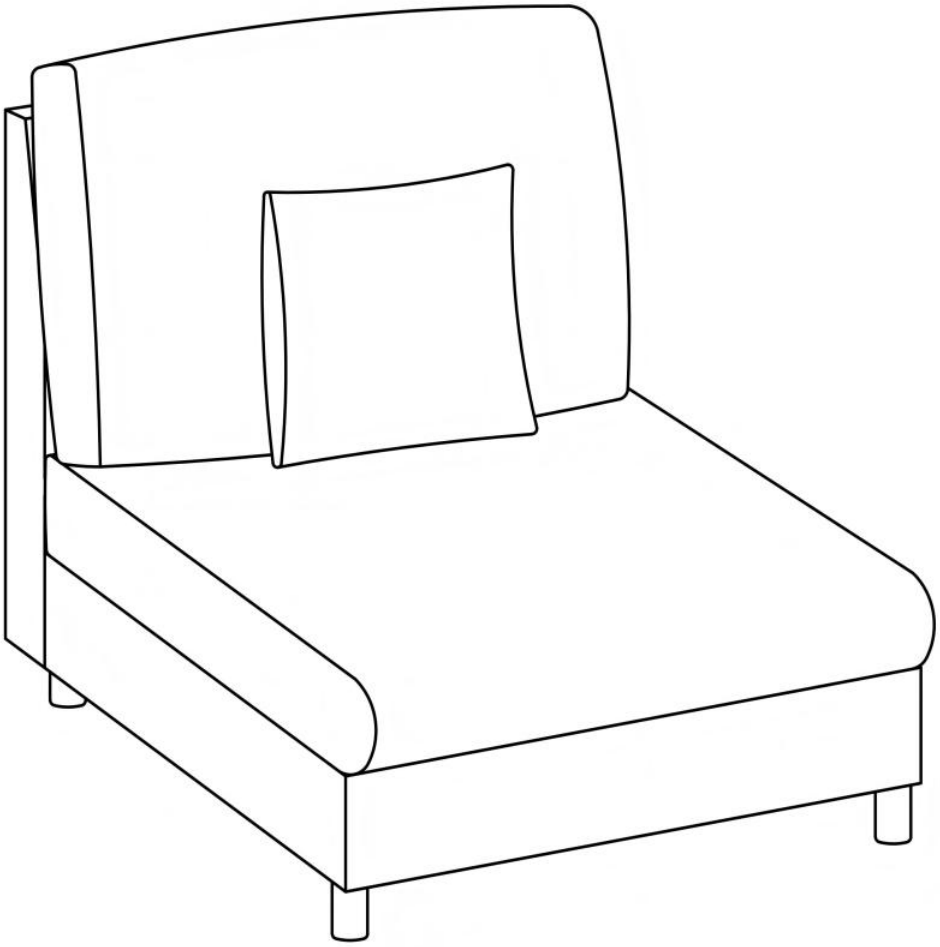

01

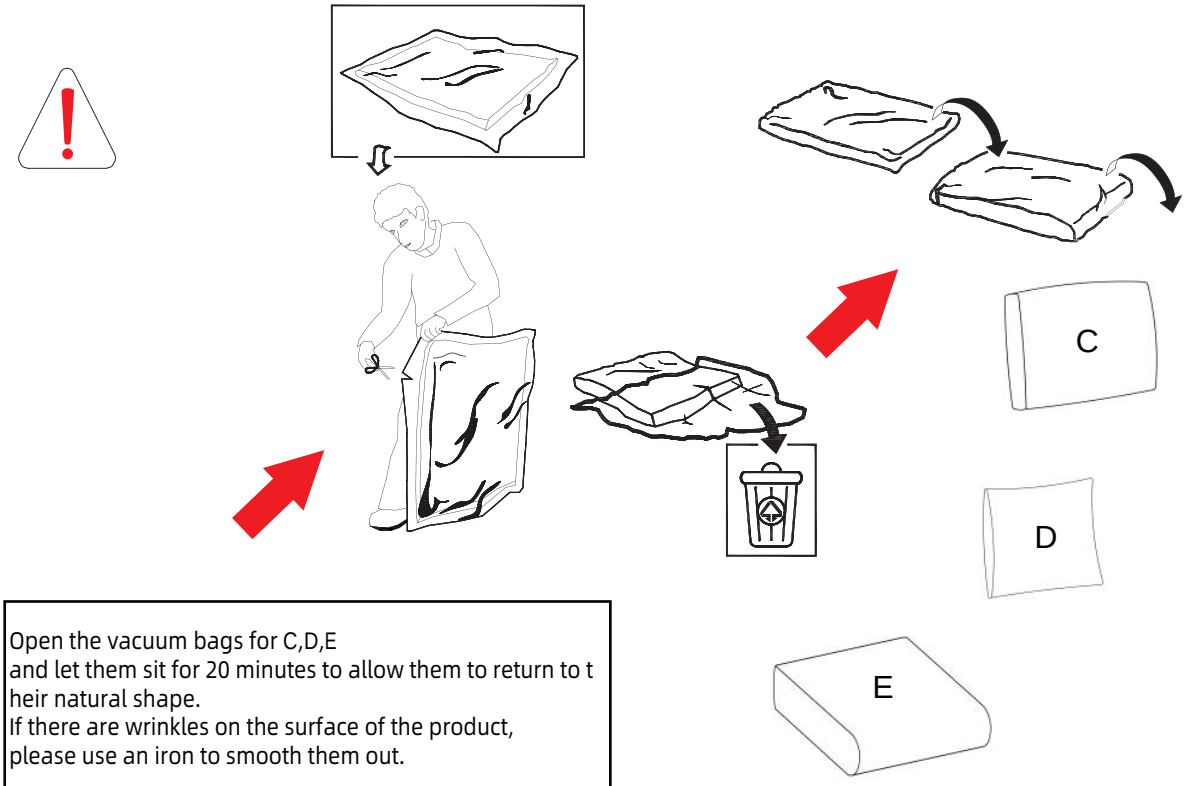

Open the vacuum bags for C,D,E
and let them sit for 20 minutes to allow them to return to t
heir natural shape.
If there are wrinkles on the surface of the product,
please use an iron to smooth them out.

Note: When using a knife or scissors to open the
packaging, be careful not to damage the product.

C	x 1
D	x 1

02

CAN REMOVABLE AND WASHABLE

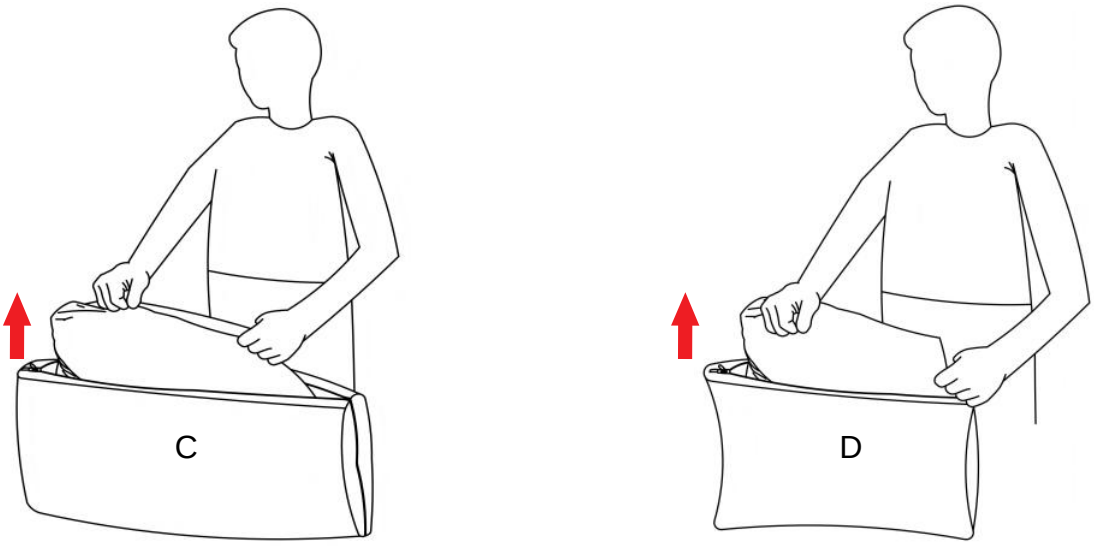

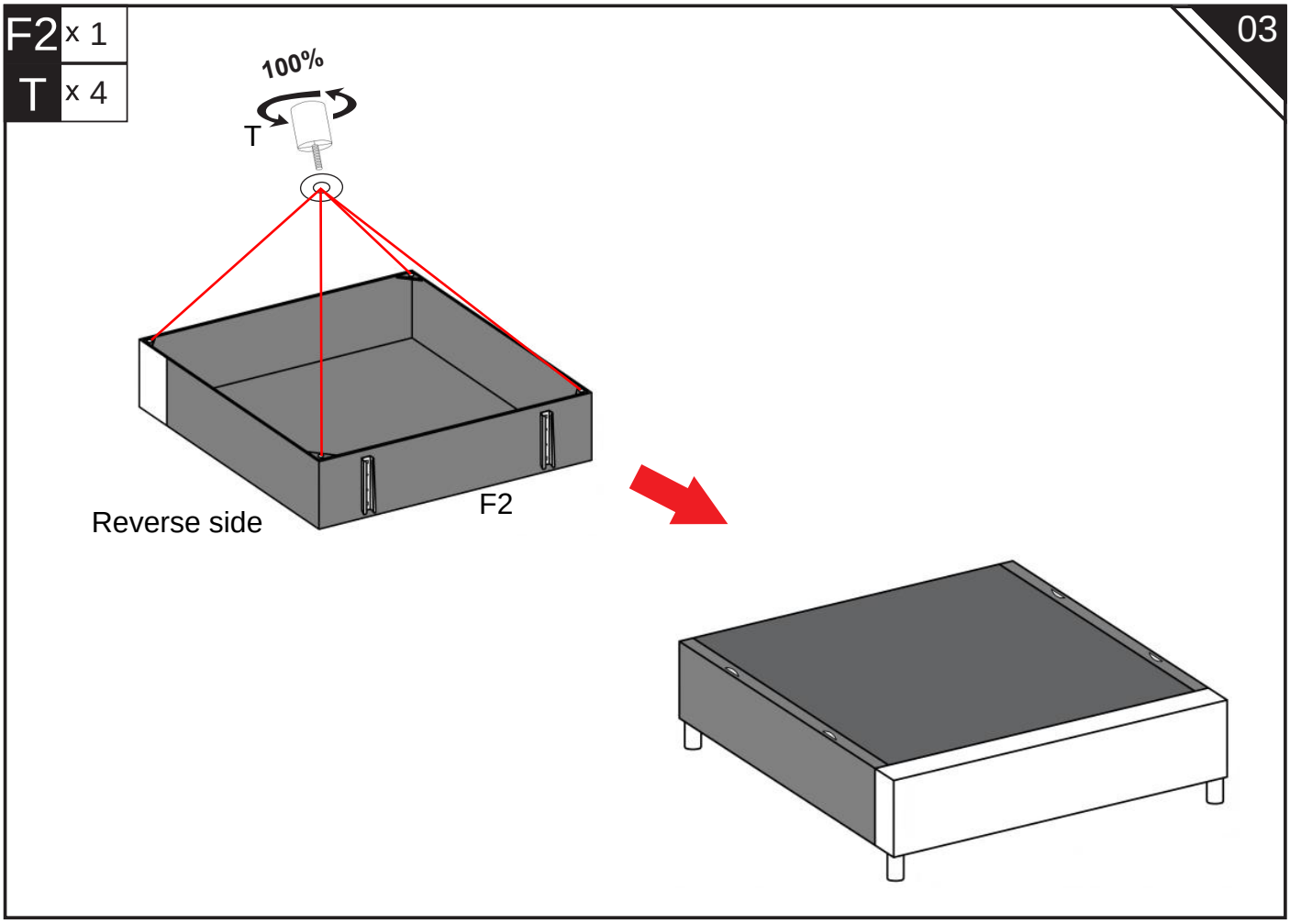
F2 x 1
T x 4
03
100%
T
Reverse side
F2

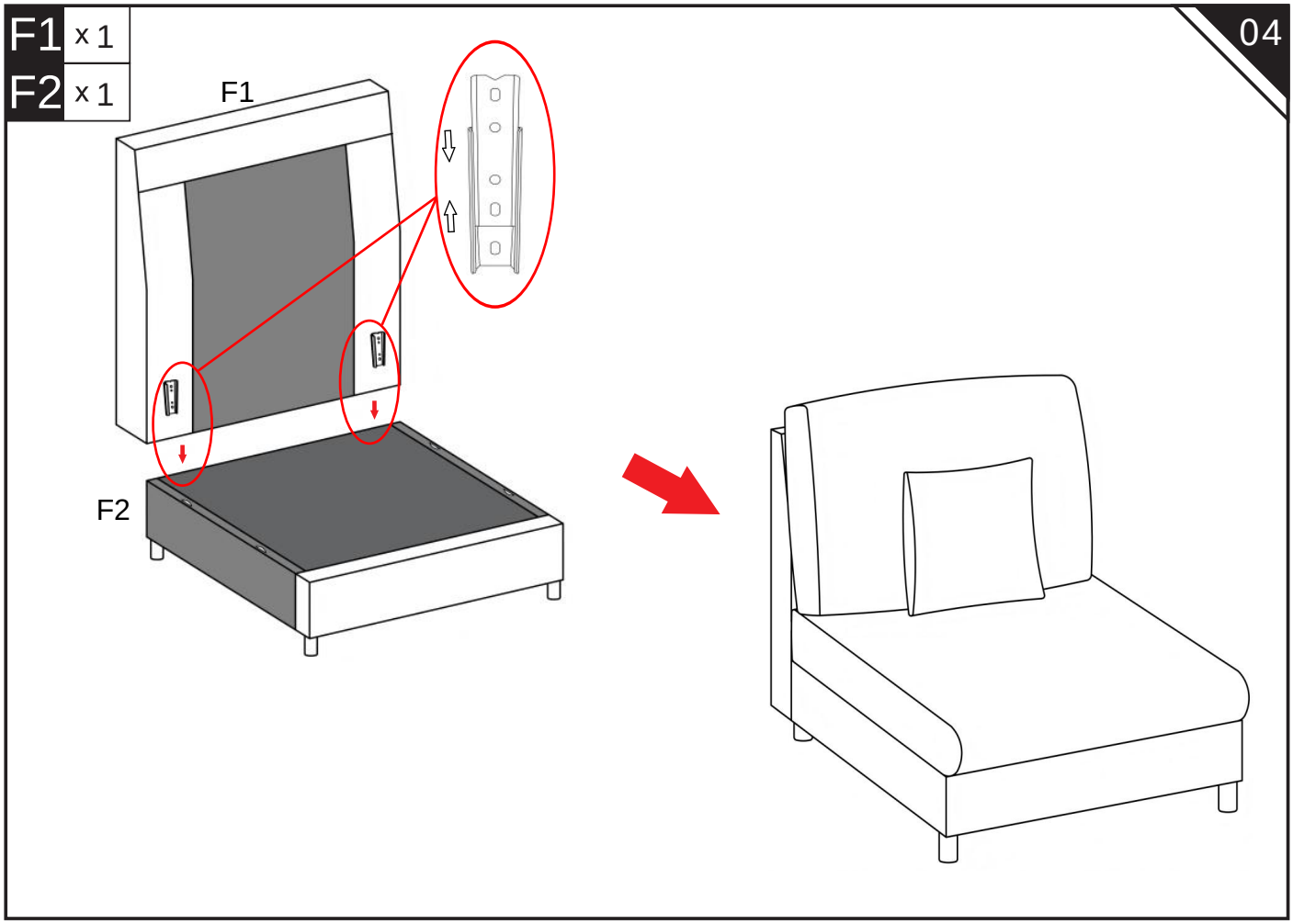
F1 x 1
F2 x 1
04
F1
F2

05

A1	x 1
A2	x 1
B1	x 1
B2	x 1
F1	x 1
F2	x 1
G	x 4

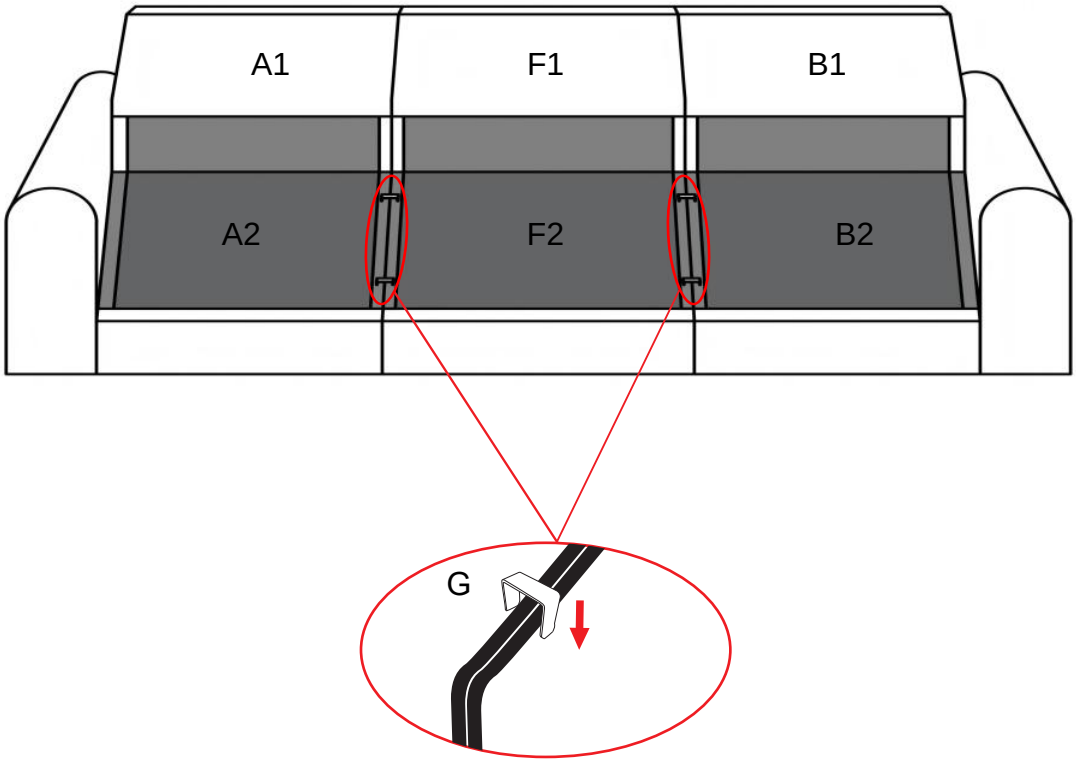

06

Place the pedals and cushions as shown in the picture

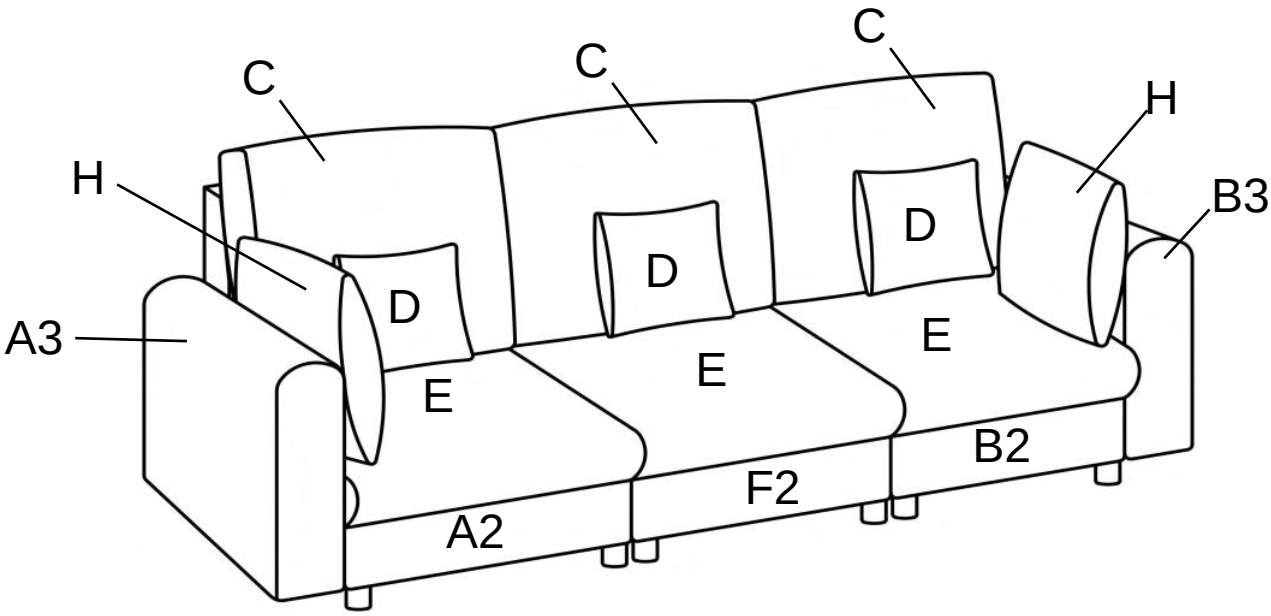

PLEASE NOTE

Read all instructions before assembly. Save the assembly instructions for future use.Before each use or ass embly, check for damaged hardware and missing parts. If replace-ment parts and instructions are needed, contac t the manufacturer at service@wyidaseat.com Do not use replacement parts, and periodically check the tightness and location of fasteners and screws.

FOOTREST INSTALLATION GUIDE

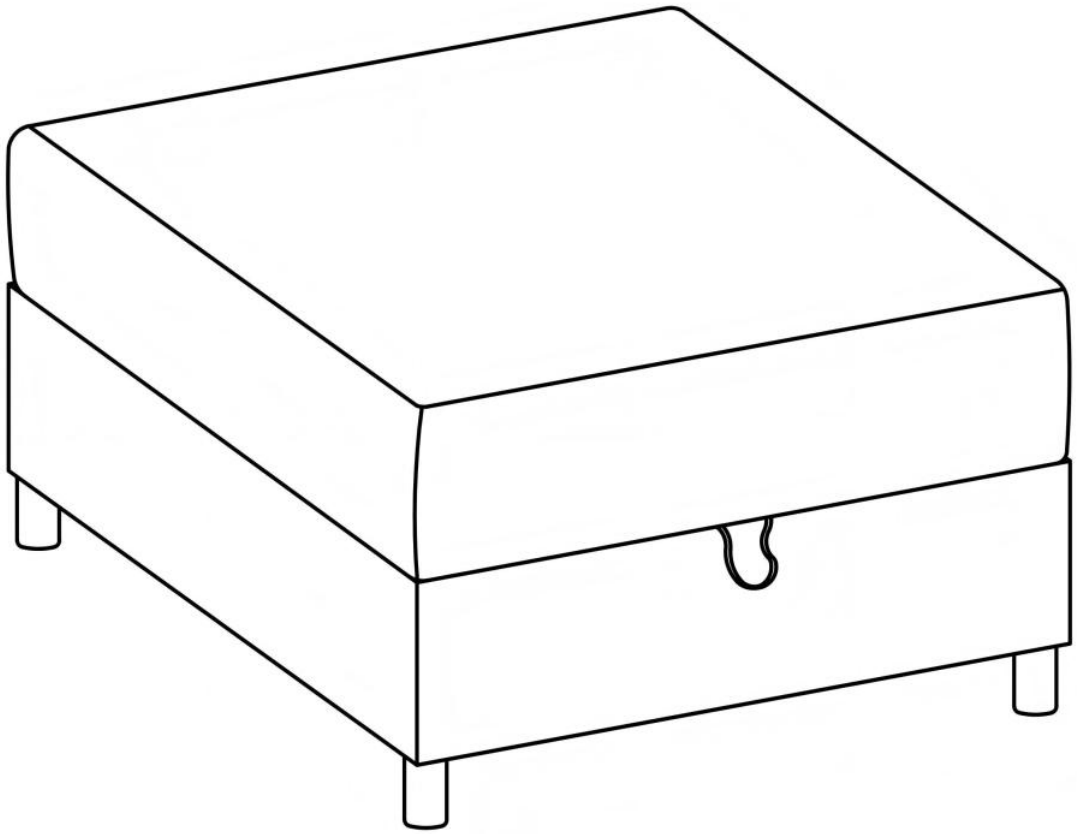

01

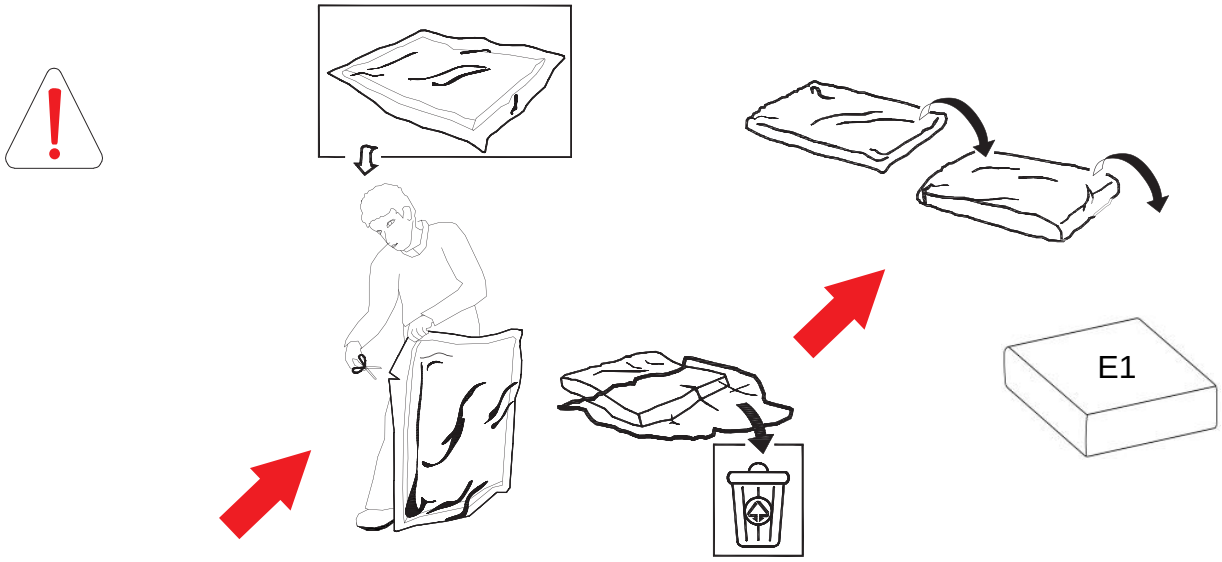

Open the vacuum bags for E1
and let them sit for 20 minutes to allow them to return to t
heir natural shape.
If there are wrinkles on the surface of the product,
please use an iron to smooth them out.

Note: When using a knife or scissors to open the
packaging, be careful not to damage the product.

02

E2	x 1
T	x 4

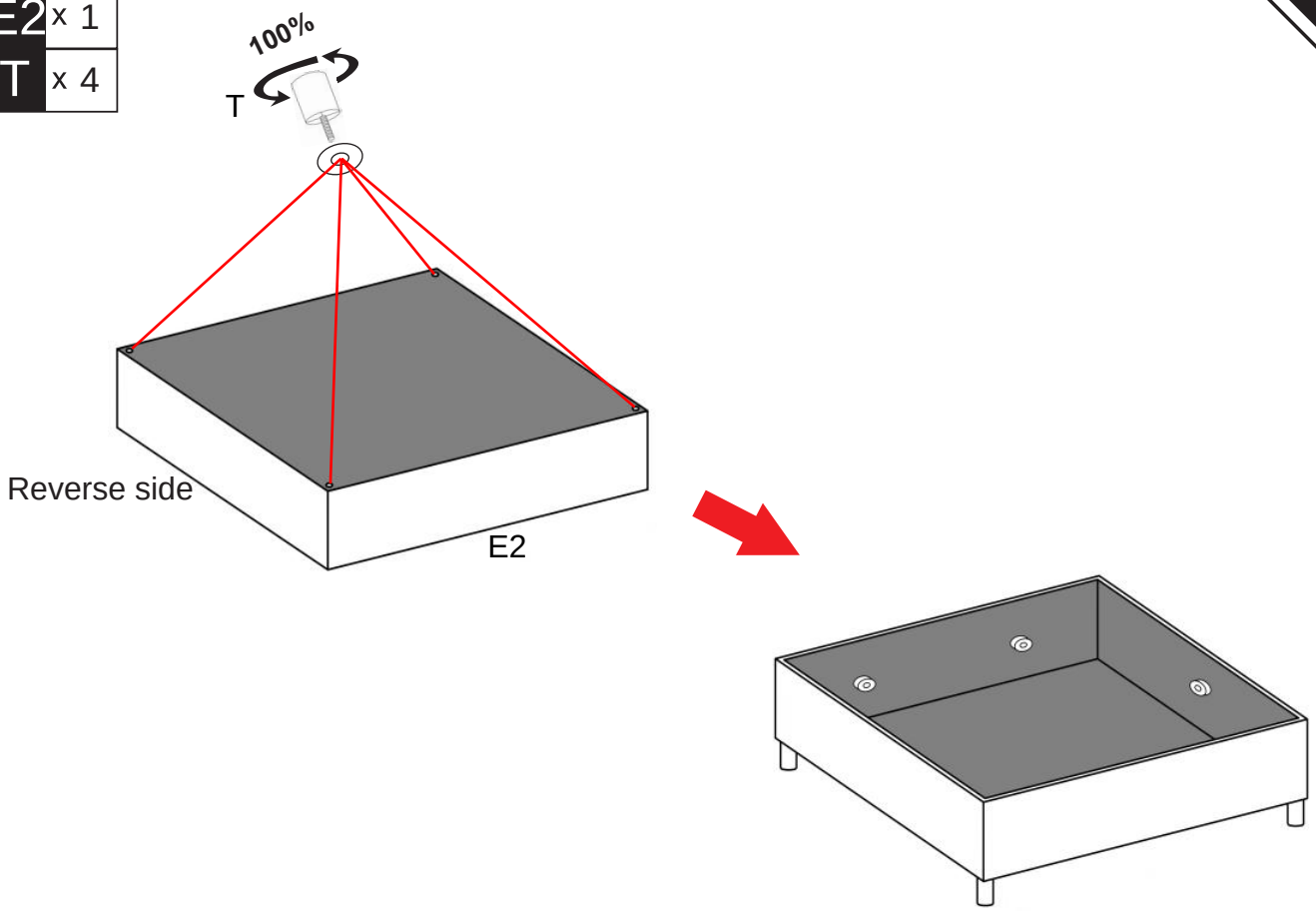

E2 x 1
E3 x 1

03

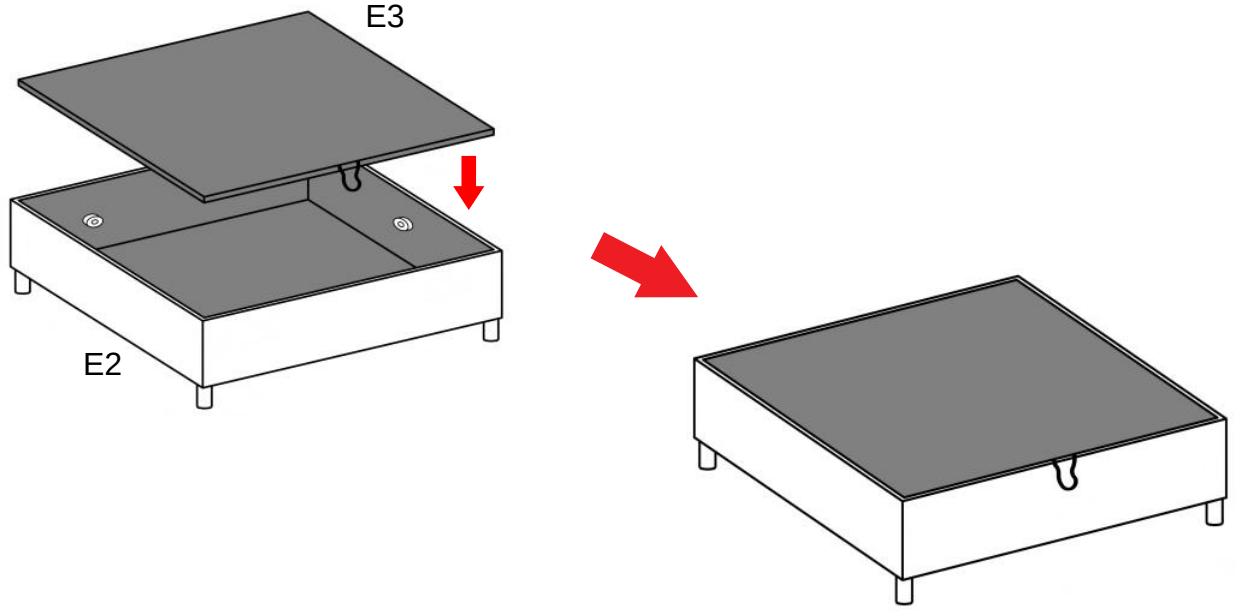

E1 x 1

04

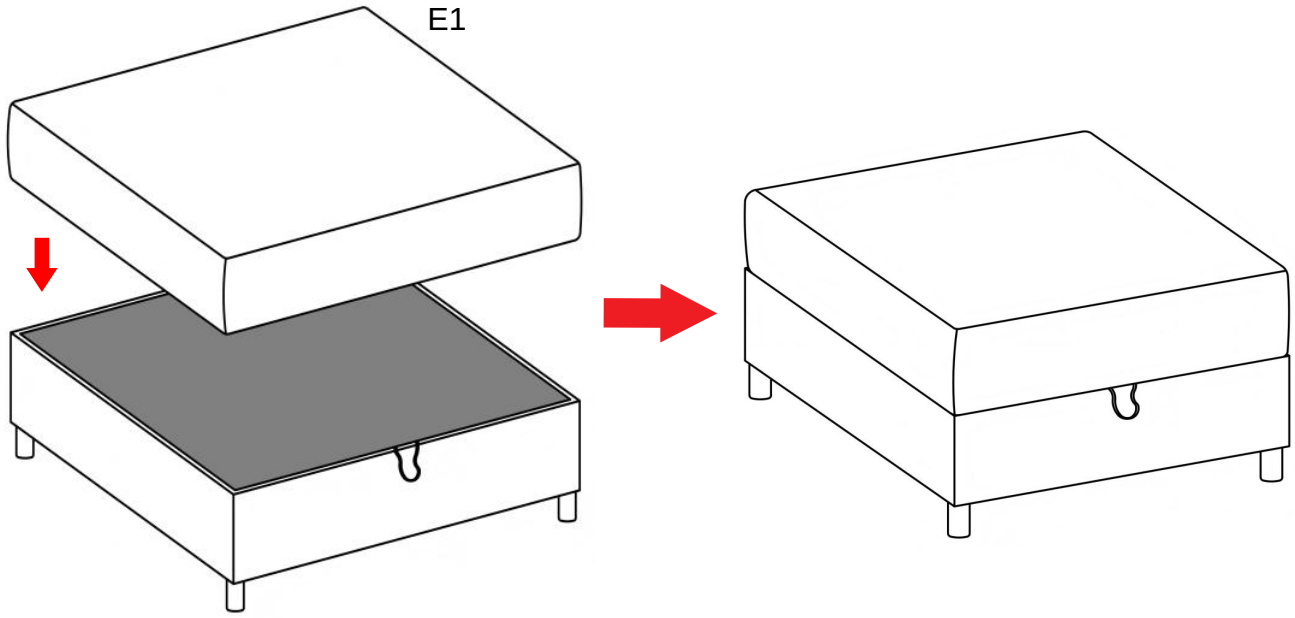

WARRANTY

So glad you have completed the assembly and can enjoy it.
If you are satisfied with our products, thank you for showing your favored sectional sofa recliner to your around.

Our products come with a 2-month warranty, you can feel free to contact us at any time.

Methods:
If you choose Amazon, going to your Amazon order detail page
Order>sold by>contact seller
(guaranteed response within 24 hours)
If you choose other platform, please contact us by:
Email:service@wyidaseat. com(Please indicate the shopping platform you are using and the platform order number, we will reply to you within 24 hours).

AFTER-SALE POLICY

1.For return reason:
Wrong purchase, bought by mistake, no longer needed, doesn't meet expectation, a size smaller than expectation, customer need to cover the return shipping fee.

2.For cancel order:
Customer needs to pay for shipping fee and carrier handle fee if the item has been shipped out. For change address: customer needs to pay for extra shippingfee and carrier handle fee if the item has been shipped out.

3.Customer Service:
Any problem with the product or shipping issue, please feel free to contac us, we will try our best to serve and help.

Dear Customer,

Thank you for choosing us.

For safe use, please read this manual before installation, and keep it for after use.Please feel free to email us if you have any concerns about our products. We'll reply within 24 hours.

The following are the things you need to pay attention to so that we can provide you with services when you encounter problems during the installation and use of the product:

- When the product is damaged due to courier problems, please contact our customer service in time for verification.
- We will rectify the issue as soon as possible;
- We provide a 7-day no-reason return service (note that the returneo product will not affect the secondary sales);

We offer product explanations, installation instructions, product maintenance and maintenance methods.

If you feel satisfied with our product and service,
- Please set our store as your favorites;
- Please recommend our products to your friends;
- Please and leave us your purchase experience in our store or product page.

Feedback or reviews from you will greatly help us offer better services to players around the world.

Best regards

Avoid using sharp objects such as a knife to cut open packing as you may accidentally damage the upholstery.

E-mail:service@wyidaseat.com

www.wyidaseat.com

LIFETIME LIMITED WARRANTY

WHAT IS COVERED

This warranty covers any defects in materials or workmanship, with the exceptions stated below.

HOW LONG COVERAGE LASTS

This warranty runs for as long as the original purchaser owns the product.

WHAT IS NOT COVERED

The warranty applies only to the original purchaser and does not cover: (a) wear and tear; (b) improper maintenance, misuse, or alteration; (c) repair by unauthorized representatives; (d) damage resulting from transit or handling; or (e) transportation costs.

WHAT WE WILL DO

We will repair, replace, or refund any product that proves to be defective in materials or workmanship.

HOW TO GET SERVICE

E-mail “service@wyidaseat.com” to submit your warranty claim. Please keep your receipt so that we may process your warranty request.

HOW STATE LAW APPLIES

The foregoing warranty shall be exclusive and in lieu of any other warranty, express or implied, including warranties of merchantability and fitness for a particular purpose and all other warranties otherwise arising by operation of law, course of dealing, custom, trade, or otherwise. Neither the seller nor the manufacturer shall be liable for any injury, loss or damage, direct or consequential arising out of the use or inability to use this product.

PLEASE CONTACT ME FOR EXTENDING THE WARRANTY PERIOD.

service@wyidaseat.com